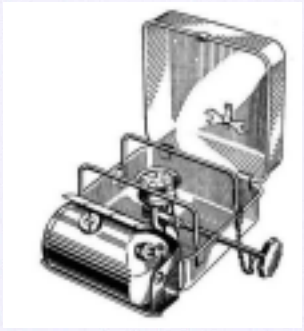

SN 40 - SN 50

TS 613 — St 218

SN 40

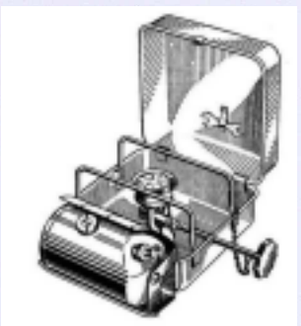

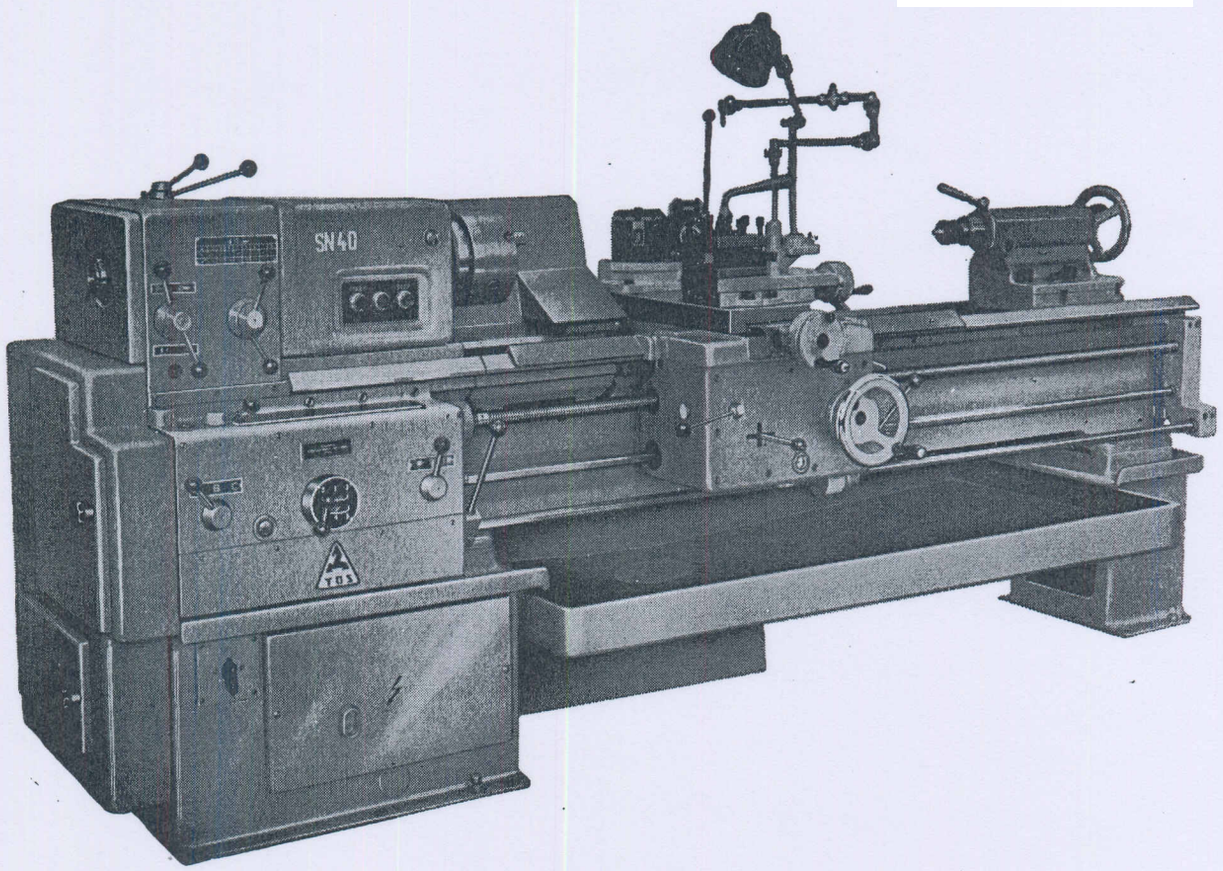

TOS

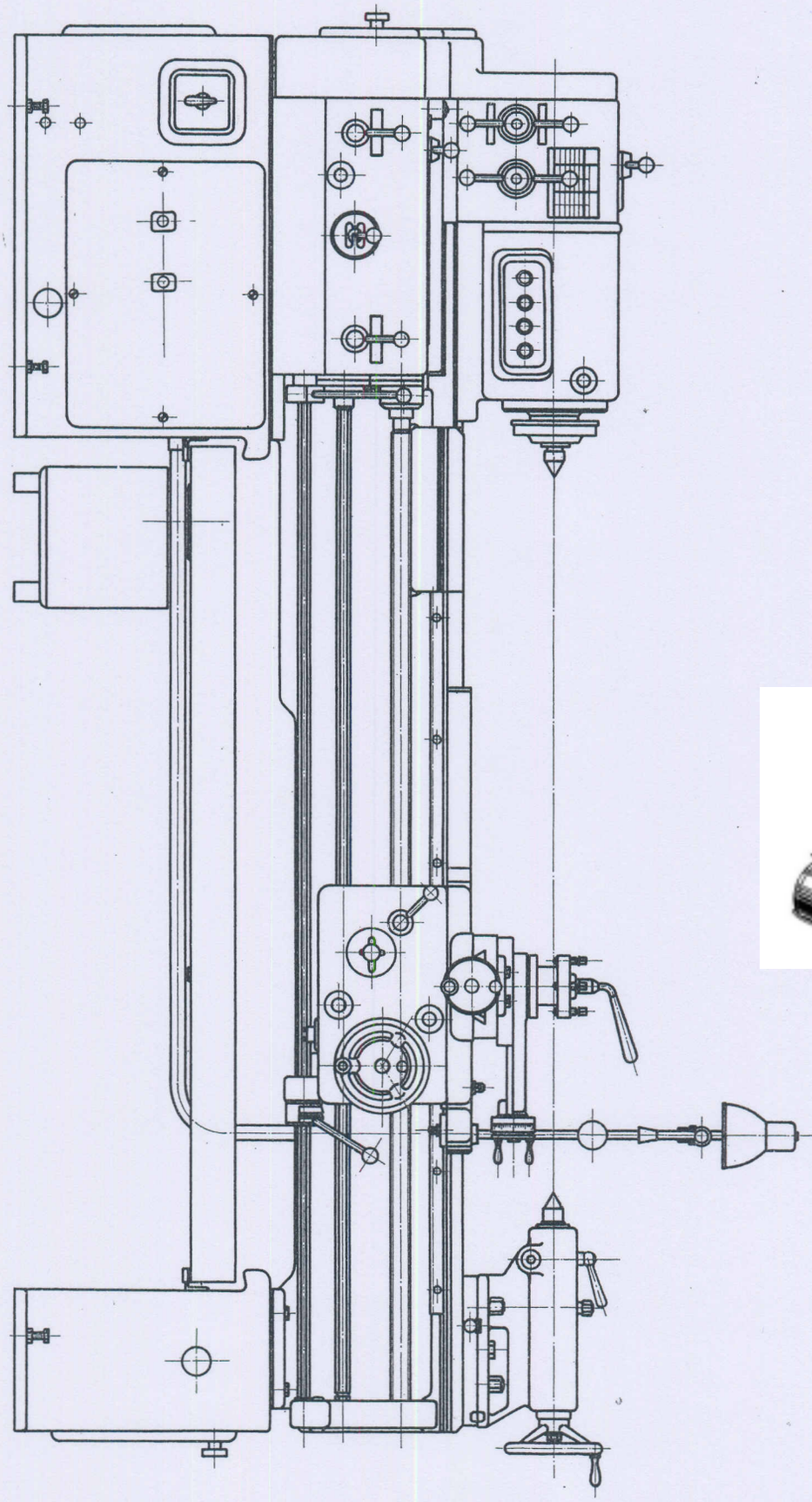

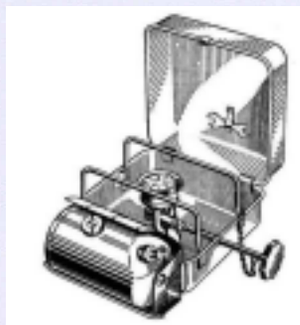

SN 40-50

1

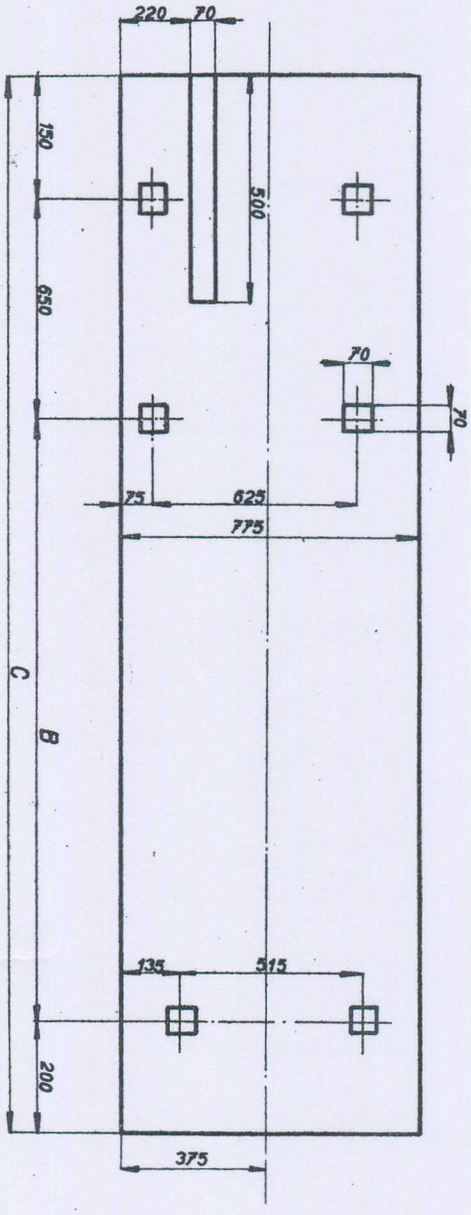

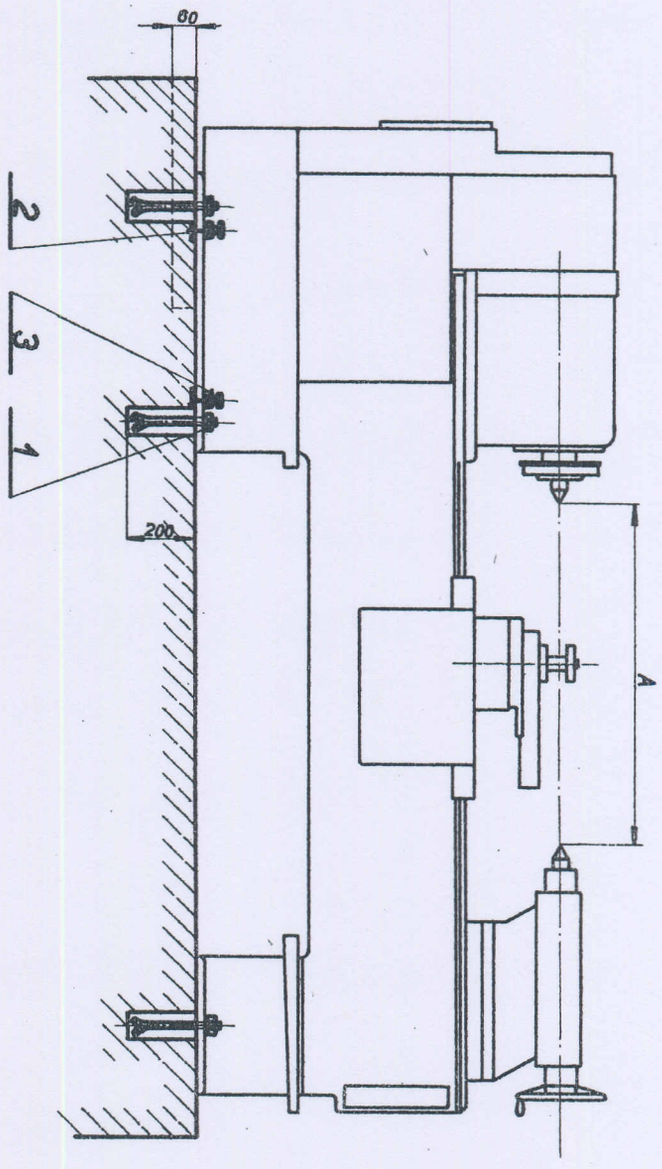

A	B	C
750	1325	2325
1000	1575	2575
1500	2075	3075
2000	2575	3575

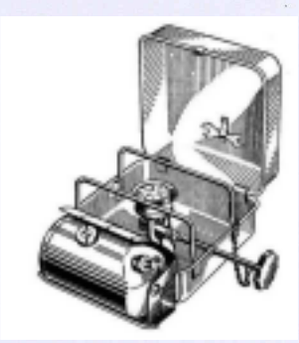

SN 40-50

2

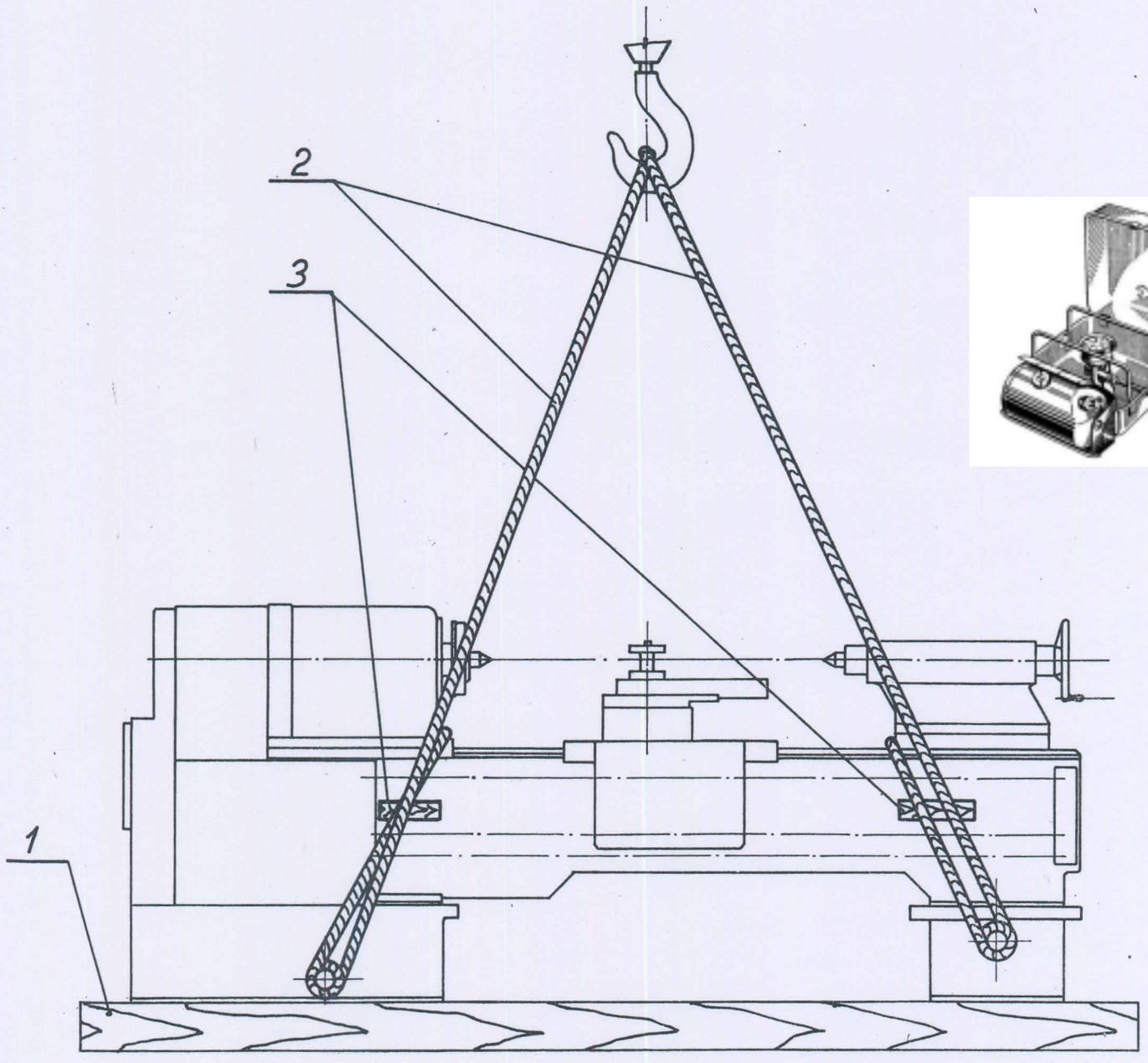

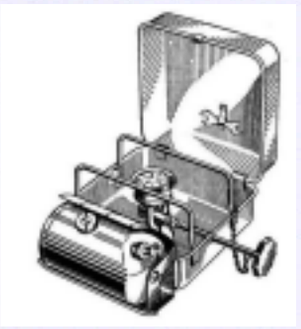

3

SN 40-50

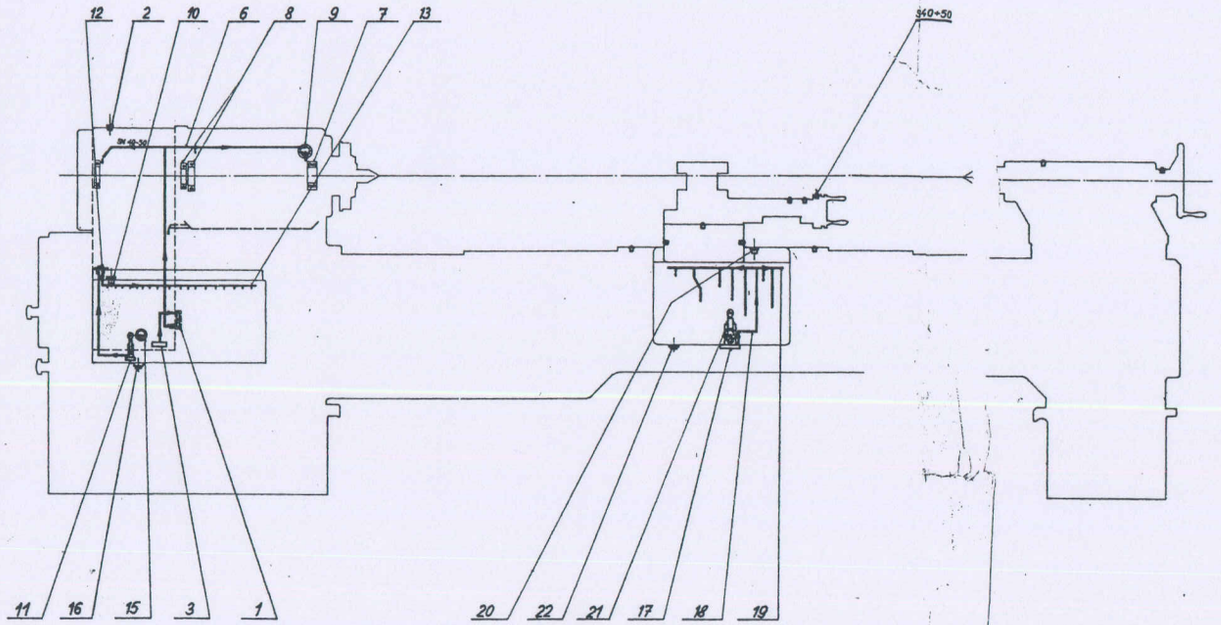

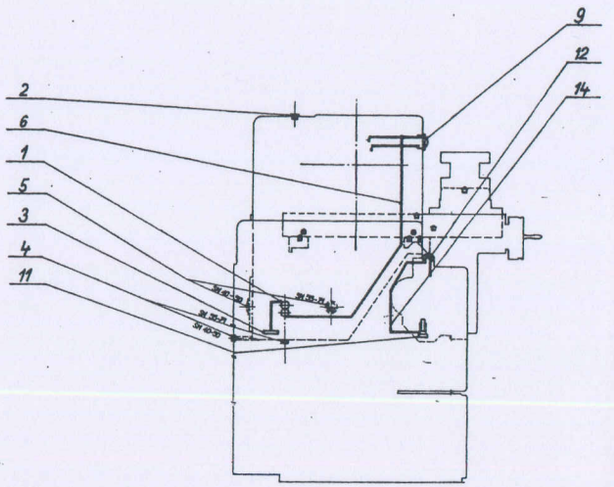

SN 40-71

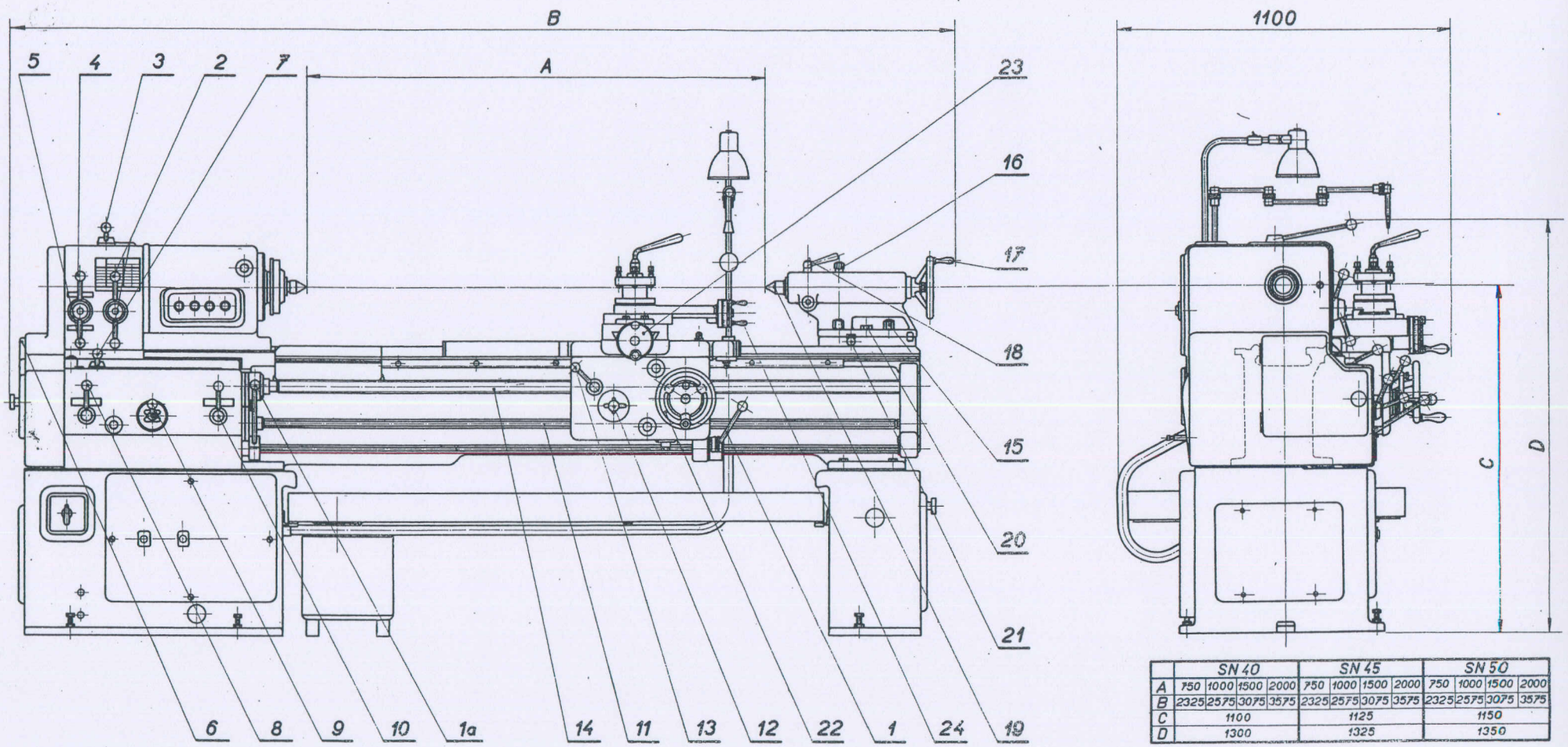

	SN 40				SN 45				SN 50			
A	750	1000	1500	2000	750	1000	1500	2000	750	1000	1500	2000
B	2325	2575	3075	3575	2325	2575	3075	3575	2325	2575	3075	3575
C	1100				1125				1150			
D	1300				1325				1350			

OBR. 4

SN 40-50

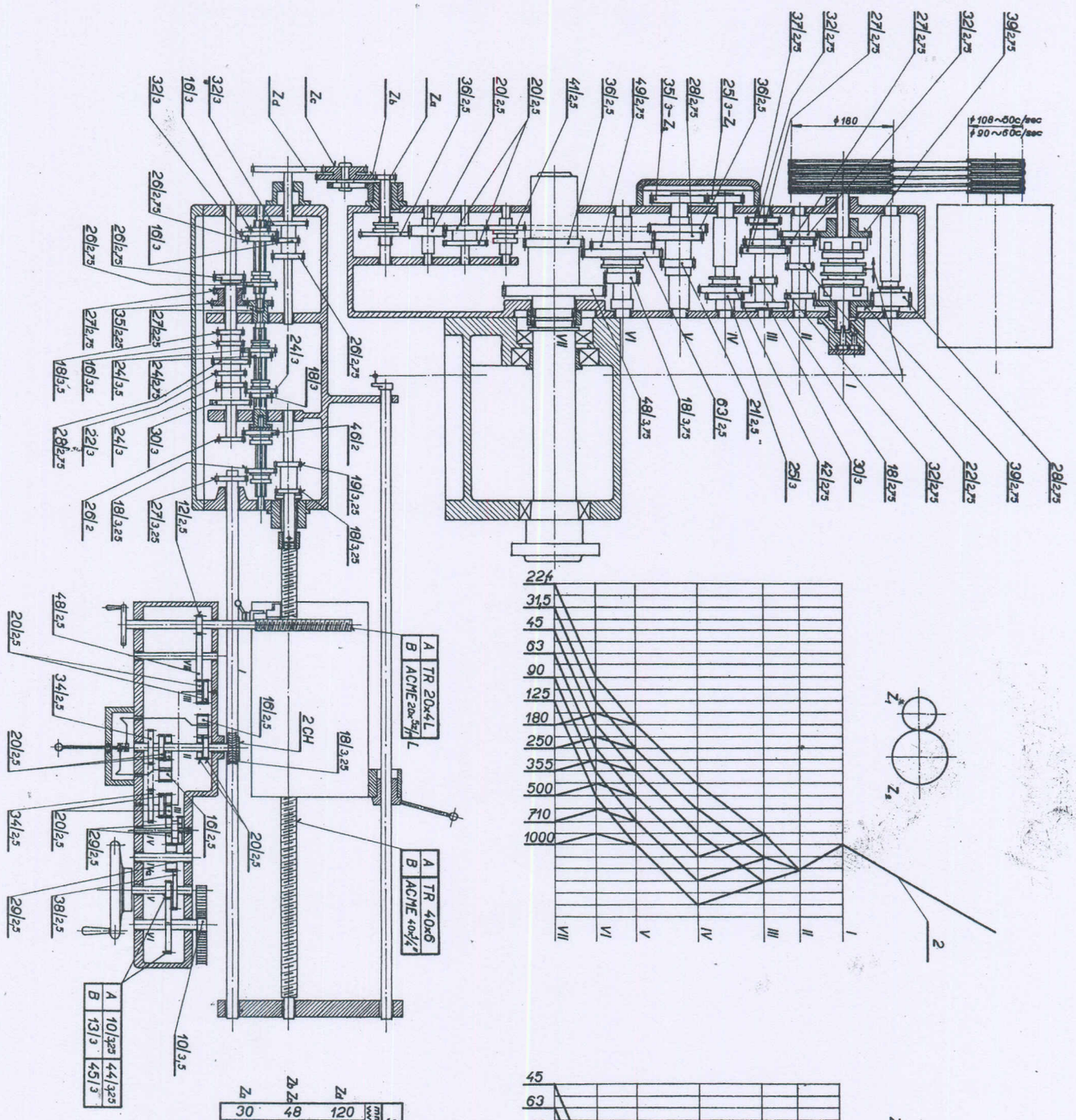

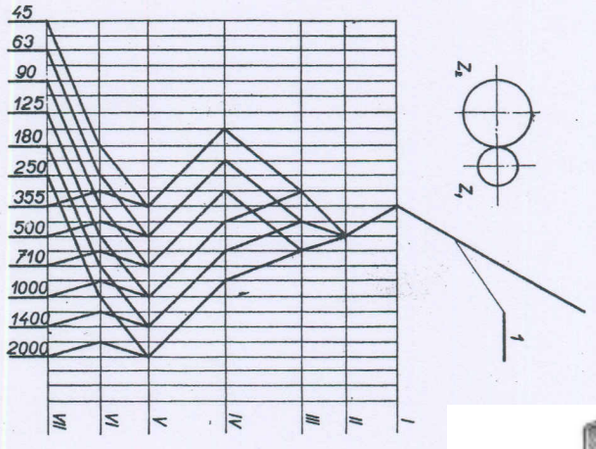

$A \Rightarrow \frac{Z_a Z_c}{Z_b Z_d} \Rightarrow Z_a/Z_b/Z_d$

Z_a	Z_b Z_c	Z_d		
30	48	120	SN 40	mm/1"
				HOD DP
40	64			
	71	113		
30	60	120	SN 45	mm/1"
				HOD DP
55	88			
	71	113		
30	80	120	SN 50	mm/1"
				HOD DP
50	80			
	71	113		

$B \Rightarrow \frac{Z_a Z_c}{Z_b Z_d} \Rightarrow Z_a/Z_b/Z_d$

30	48	127	SN 40	mm/1"
				HOD DP
62	105			
	71	113		
30	60	127	SN 45	mm/1"
				HOD DP
62	105			
	71	113		
30	80	127	SN 50	mm/1"
				HOD DP
62	105			
	71	113		

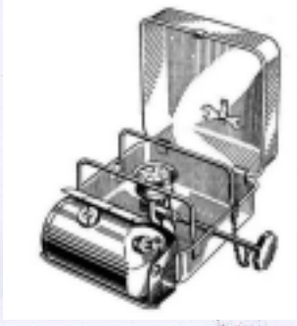

SN 40-50

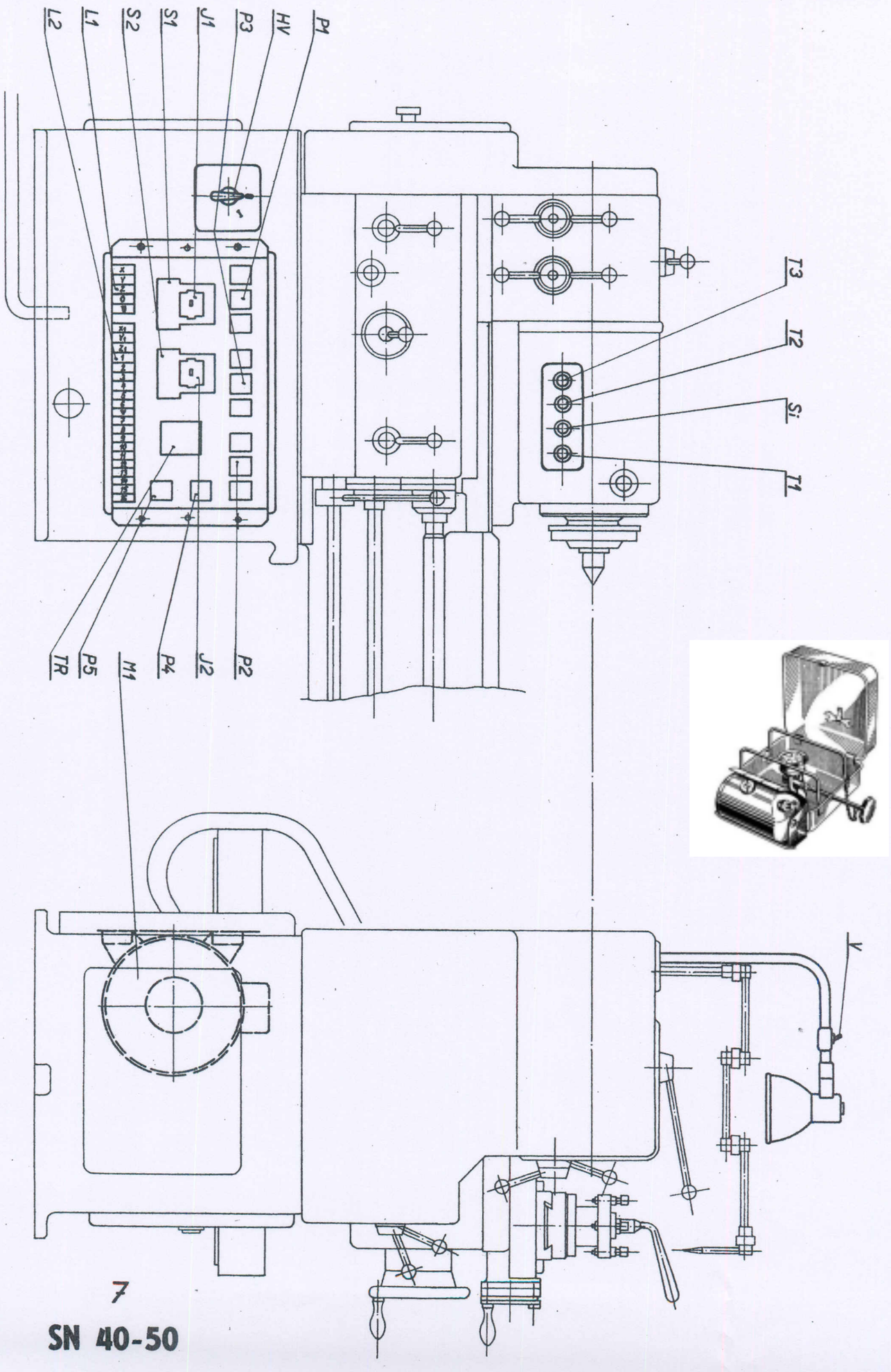
L2
L1
S2
S1
J1
P3
HV
P1
T3
T2
Si
I1
TR
P5
P4
J2
P2
M1
Y

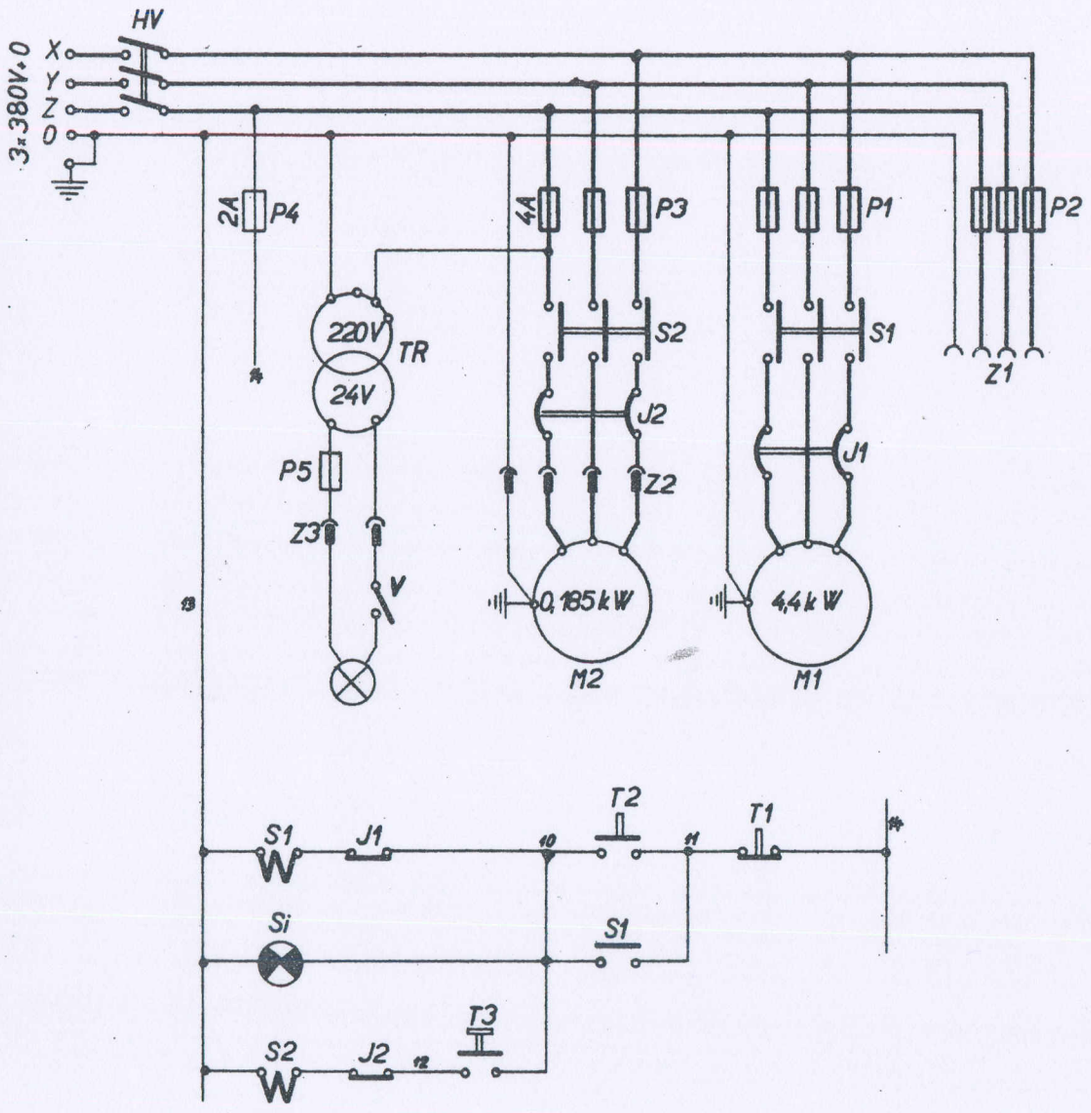

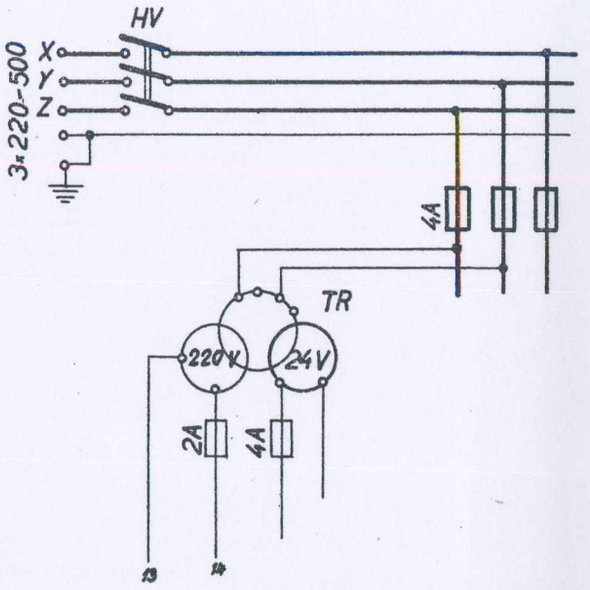

	220 V 50 Hz	380V 50Hz	400-440 V 50Hz	500-550 V 50Hz	220V 60Hz	400-440V 60 Hz
P1	25A	20A	20A	15A	35A	25A
P2	10A	10A	10A	6A	10A	10A
J1	RTP 17	RT 9	RT 9	RT 9	RTP 22	RT 13
J2	RT 0,4	RT 0,4	RT 0,4	RT 0,4	RT 0,9	RT 0,6

7a

SN 40-50

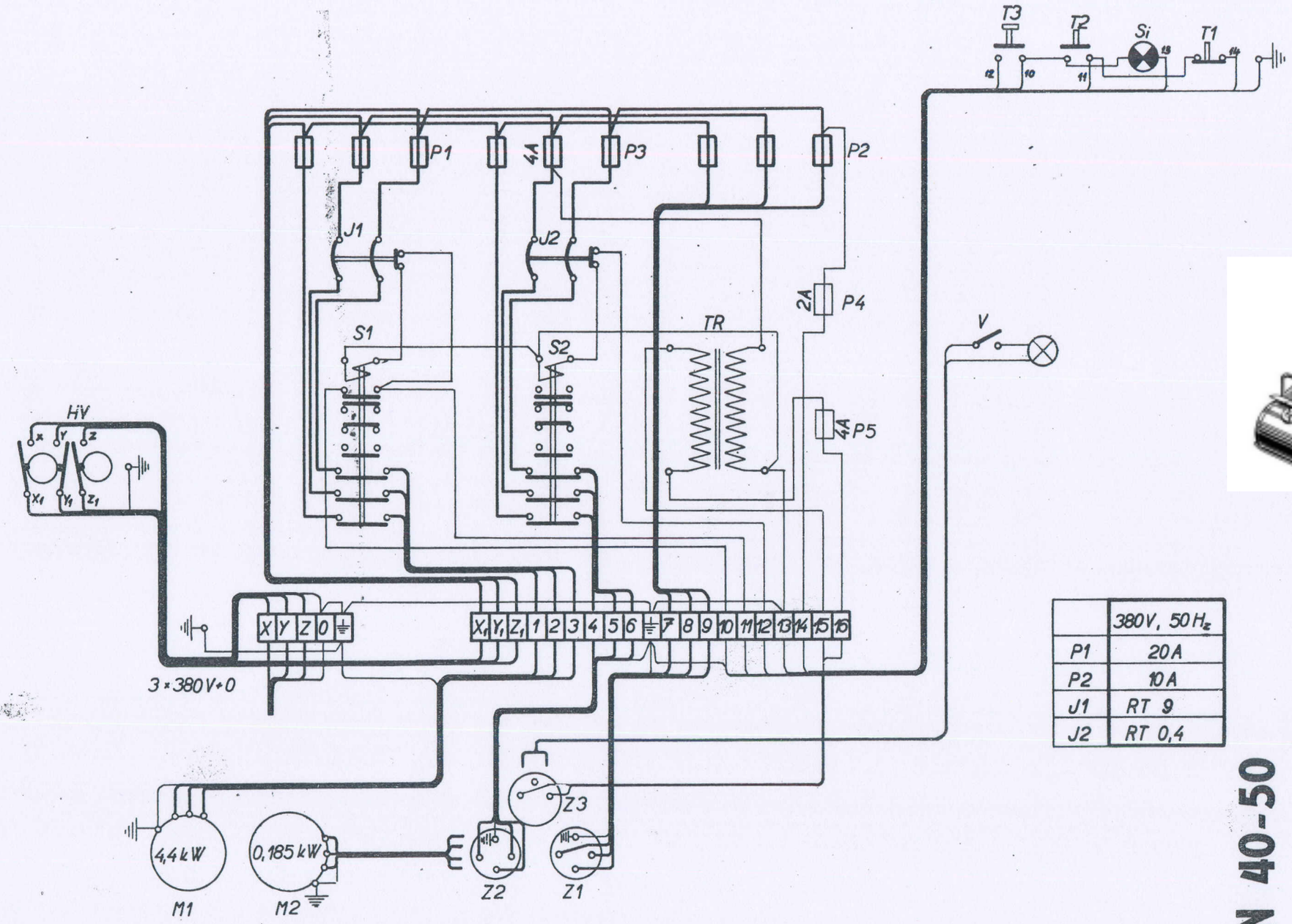

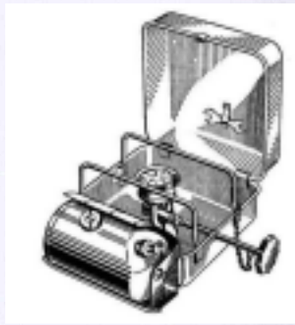

	380V, 50 Hz
P1	20 A
P2	10 A
J1	RT 9
J2	RT 0,4

SN 40-50

7 b

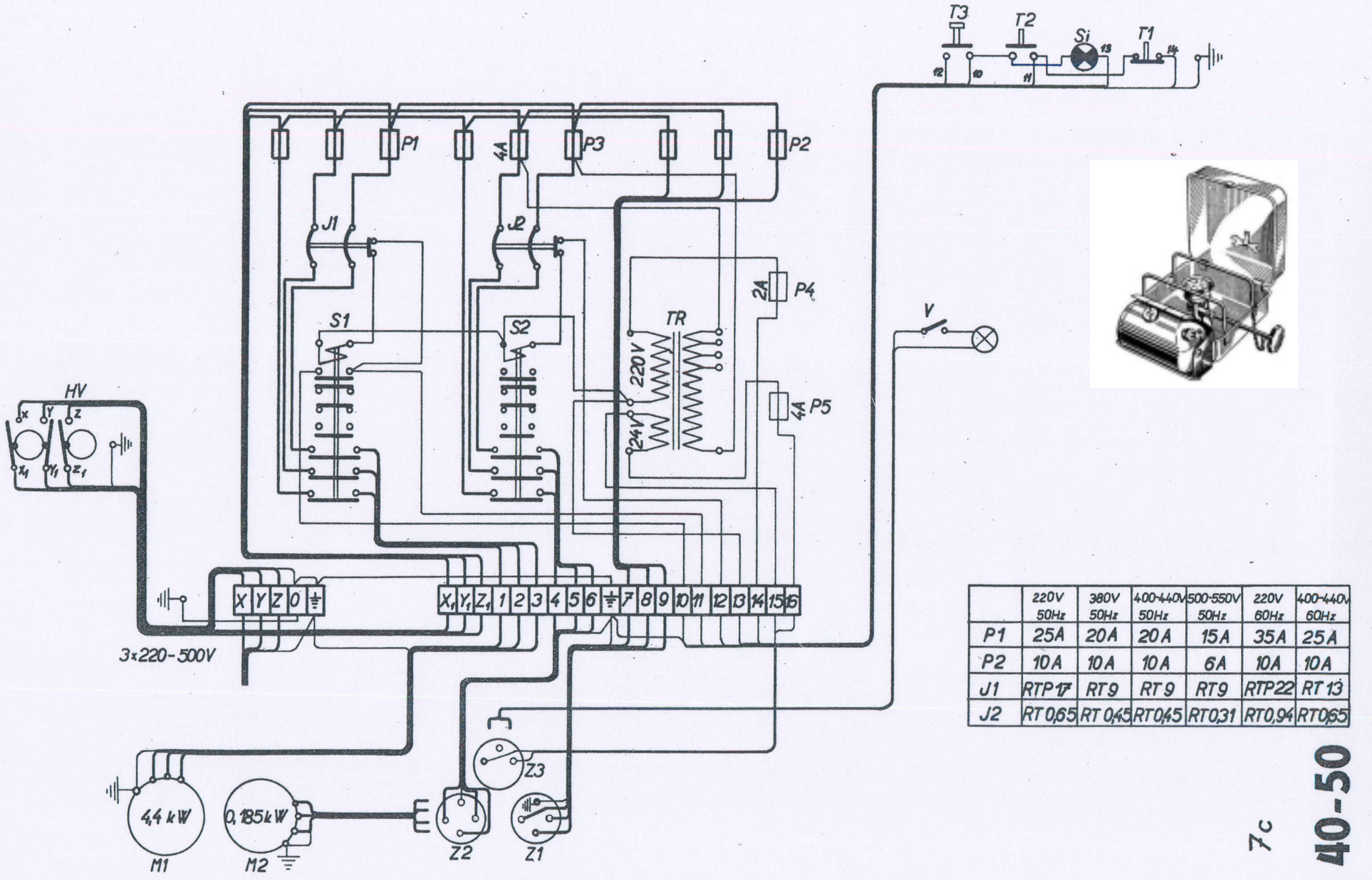

	220V 50Hz	380V 50Hz	400-440V 50Hz	500-550V 50Hz	220V 60Hz	400-440V 60Hz
P1	25A	20A	20A	15A	35A	25A
P2	10A	10A	10A	6A	10A	10A
J1	RTP17	RT9	RT9	RT9	RTP22	RT13
J2	RT0,65	RT0,45	RT0,45	RT0,31	RT0,94	RT0,65

7c

SN 40-50

W

	1	2	3	4	5	6
1:1 B					0.05	0.05
1:1 C						
1:1 A						
8:1 B						
8:1 C						
8:1 A						

M

	1	2	3	4	5	6
1:1 B	0.08	0.09	0.11	0.12	0.14	0.20
1:1 C	0.16	0.18	0.22	0.24	0.28	0.40
1:1 A	0.32	0.36	0.44	0.48	0.56	0.80
8:1 B	0.64	0.72	0.88	0.96	1.12	1.60
8:1 C	1.28	1.44	1.76	1.92	2.24	3.20
8:1 A	2.56	2.88	3.52	3.84	4.48	6.40

n ∿∿ 1"

	1	2	3	4	5	6	2
1:1 B	32	36	44	48	56	80	
1:1 C	16	18	22	24	28	40	19
1:1 A	8	9	11	12	14	20	
8:1 B	4	4 1/2	5 1/2	6	7	10	
8:1 C	2	2 1/4	2 3/4	3	3 1/2	5	
8:1 A	1			1 1/2	1 3/4	2 1/2	

∿∿ mm

	1	2	3	4	5	6
1:1 B	0.5			0.75		1.25
1:1 C	1			1.5	1.75	2.5
1:1 A	2			3	3.5	5
8:1 B	4	4.5	5.5	6	7	10
8:1 C	8	9	11	12	14	20
8:1 A	16	18	22	24	28	40

∿∿ DP

	1	2	3	4	5	6
1:1 B	64	72				
1:1 C	32	36	44	48	56	
1:1 A	16	18	22	24	28	40
8:1 B	8	9	11	12	14	20
8:1 C	4	4 1/2	5 1/2	6	7	10
8:1 A	2	2 1/4	2 3/4	3	3 1/2	5

∿∿ MOD

	1	2	3	4	5	6
1:1 B	0.25					
1:1 C	0.5			0.75		1.25
1:1 A	1			1.5	1.75	2.5
8:1 B	2	2.25	2.75	3	3.5	5
8:1 C	4	4.5	5.5	6	7	10
8:1 A	8	9	11	12	14	20

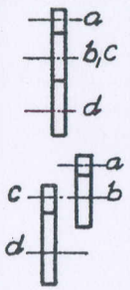

		SN40	SN45	SN50
a		30	30	30
b	∿∿∿ 6mm	48	60	80
c		64	88	80
d		120	120	120
a		40	55	50
b		64	88	80
c		71	71	71
d		113	113	113

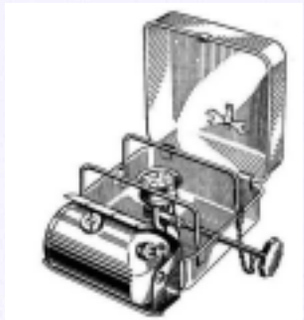

SN 40-50

				1	2	3	4	5	6
W	= 1/2 ↔	1:1	B	0.006	0.005	0.005	0.004	0.003	0.002
			C	0.012	0.011	0.009	0.008	0.007	0.005
			A	0.024	0.022	0.018	0.016	0.014	0.010
	=	8:1	B	0.049	0.043	0.035	0.032	0.027	0.019
			C	0.097	0.086	0.071	0.065	0.055	0.039
			A	0.195	0.173	0.142	0.130	0.110	0.078
M	=	1:1	B						
			C						
			A						
	=	8:1	B						
			C						
			A					0.169	0.242

				1	2	3	4	5	6	2
n 1"	1:1	B		32	36	44	48	56	80	
		C		16	18	22	24	28	40	19
		A		8	9	11	12	14	20	
	8:1	B		4	4 1/2	5 1/2	6	7	10	
		C		2	2 1/4	2 3/4	3	3 1/2	5	
		A		1			1 1/2	1 3/4	2 1/2	
mm	1:1	B		0.5			0.75		1.25	
		C		1			1.5	1.75	2.5	
		A		2			3	3.5	5	
	8:1	B		4	4.5	5.5	6	7	10	
		C		8	9	11	12	14	20	
		A		16	18	22	24	28	40	

				1	2	3	4	5	6
DP	1:1	B		64	72				
		C		32	36	44	48	56	
		A		16	18	22	24	28	40
	8:1	B		8	9	11	12	14	20
		C		4	4 1/2	5 1/2	6	7	10
		A		2	2 1/4	2 3/4	3	3 1/2	5
MOD	1:1	B		0.25					
		C		0.5			0.75		1.25
		A		1			1.5	1.75	2.5
	8:1	B		2	2.25	2.75	3	3.5	5
		C		4	4.5	5.5	6	7	10
		A		8	9	11	12	14	20

SN40	a	30	62
	b	1/4" 48	105
	c		71
	d	127	113
SN45	a	30	62
	b	1/4" 60	105
	c		71
	d	127	113
SN50	a	30	62
	b	1/4" 80	105
	c		71
	d	127	113

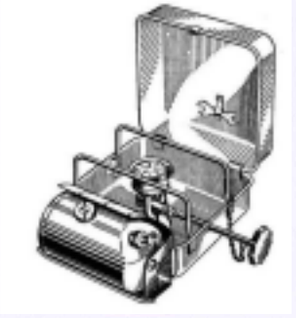

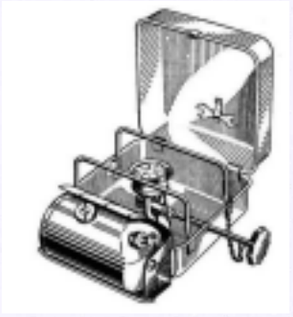

SN	z_1 z_2		z_2 z_1	
	22,4	180	45	355
	31,5	250	63	500
	45	355	90	710
	63	500	125	1000
	90	710	180	1400
	125	1000	250	2000
	↻/min.			

SN40 – SN45 – SN50

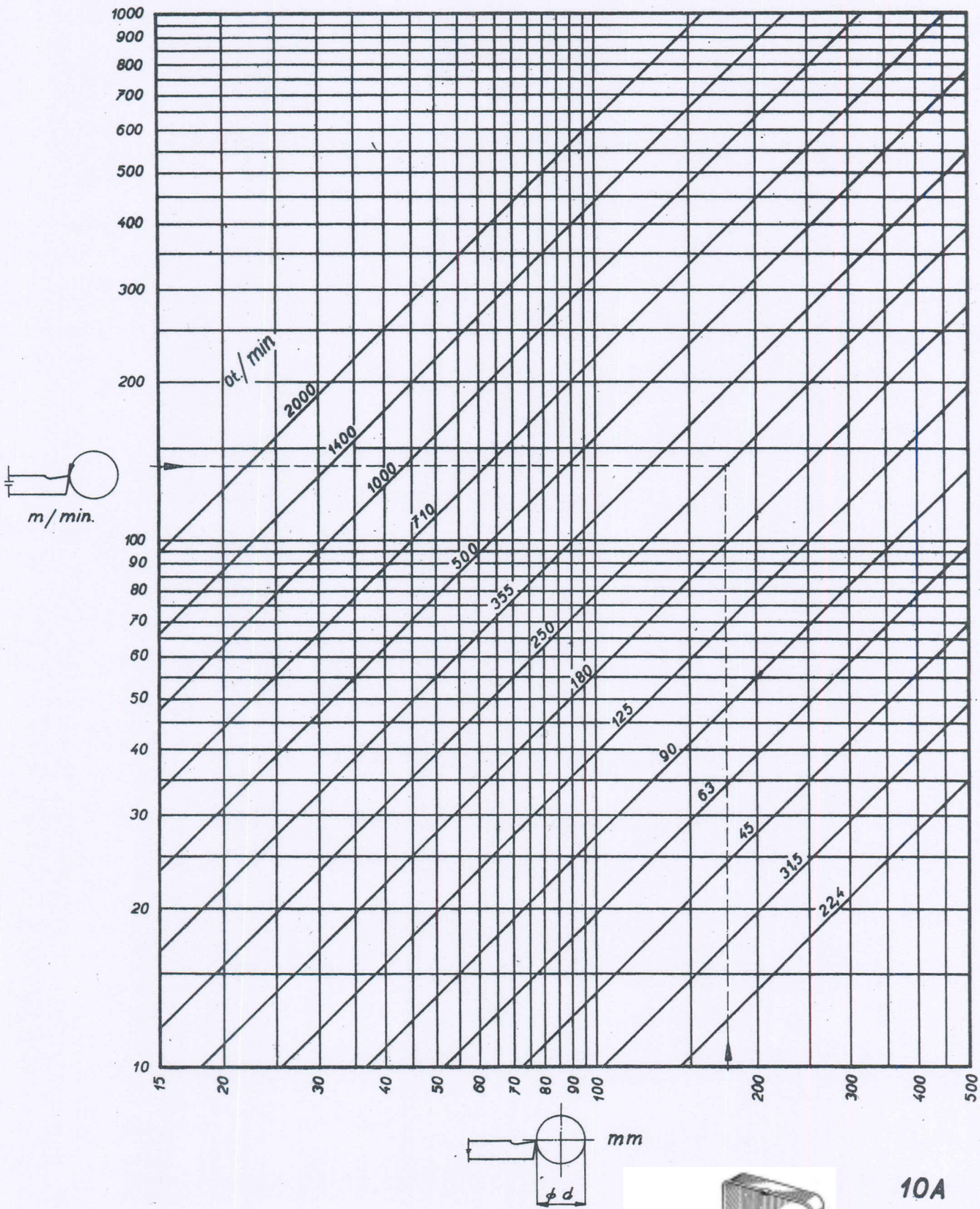

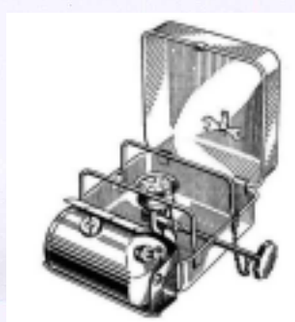

10A

SN 40-50

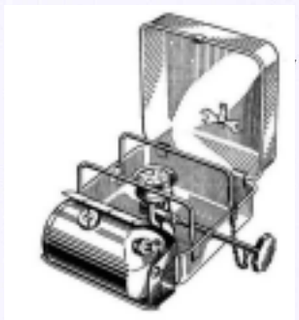

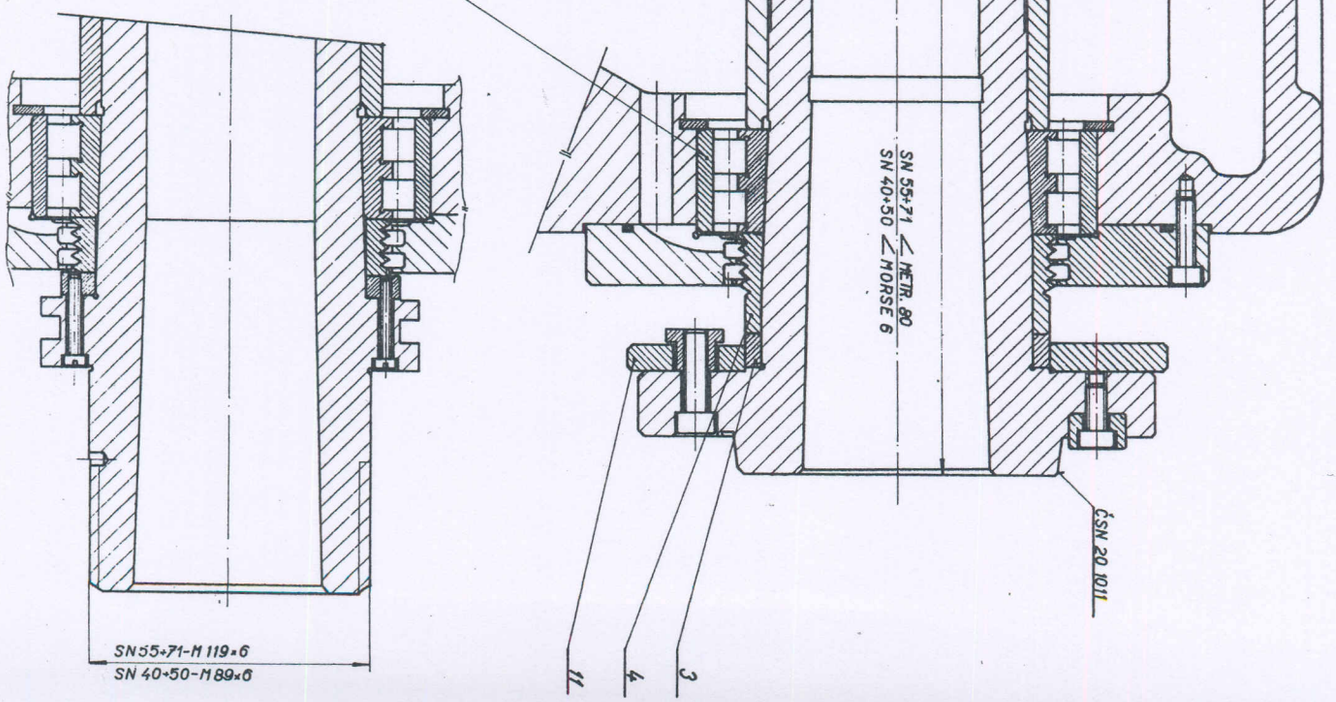
10
9
8
7
(5a)
(5)
5a
5
1
6
2
ø 61 - SN55÷71
ø 48 - SN 40÷50
SN 55÷71 - 540
SN 40÷50 - 420
ø 72 - SN 55÷71
ø 56 - SN 40÷50
SN 55÷71 ∠ METR. 80
SN 40÷50 ∠ MORSE 6
ČSN 20 1011
11
4
3
SN55÷71-M 119×6
SN 40÷50-M89×6

11

SN 40-71

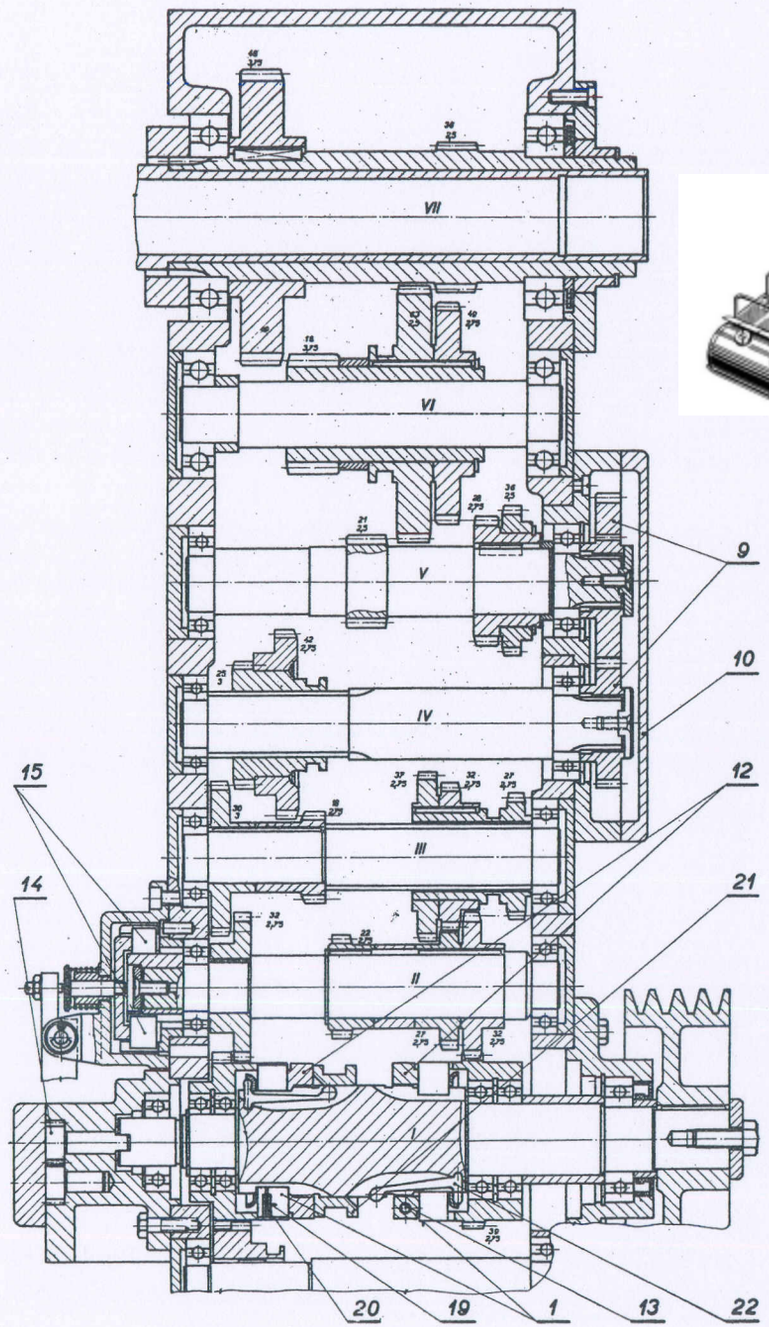
VII
VI
V
IV
III
II
I
9
10
12
21
15
14
20
19
1
13
22

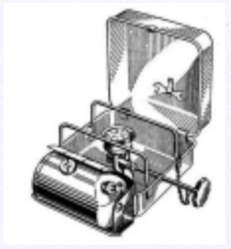

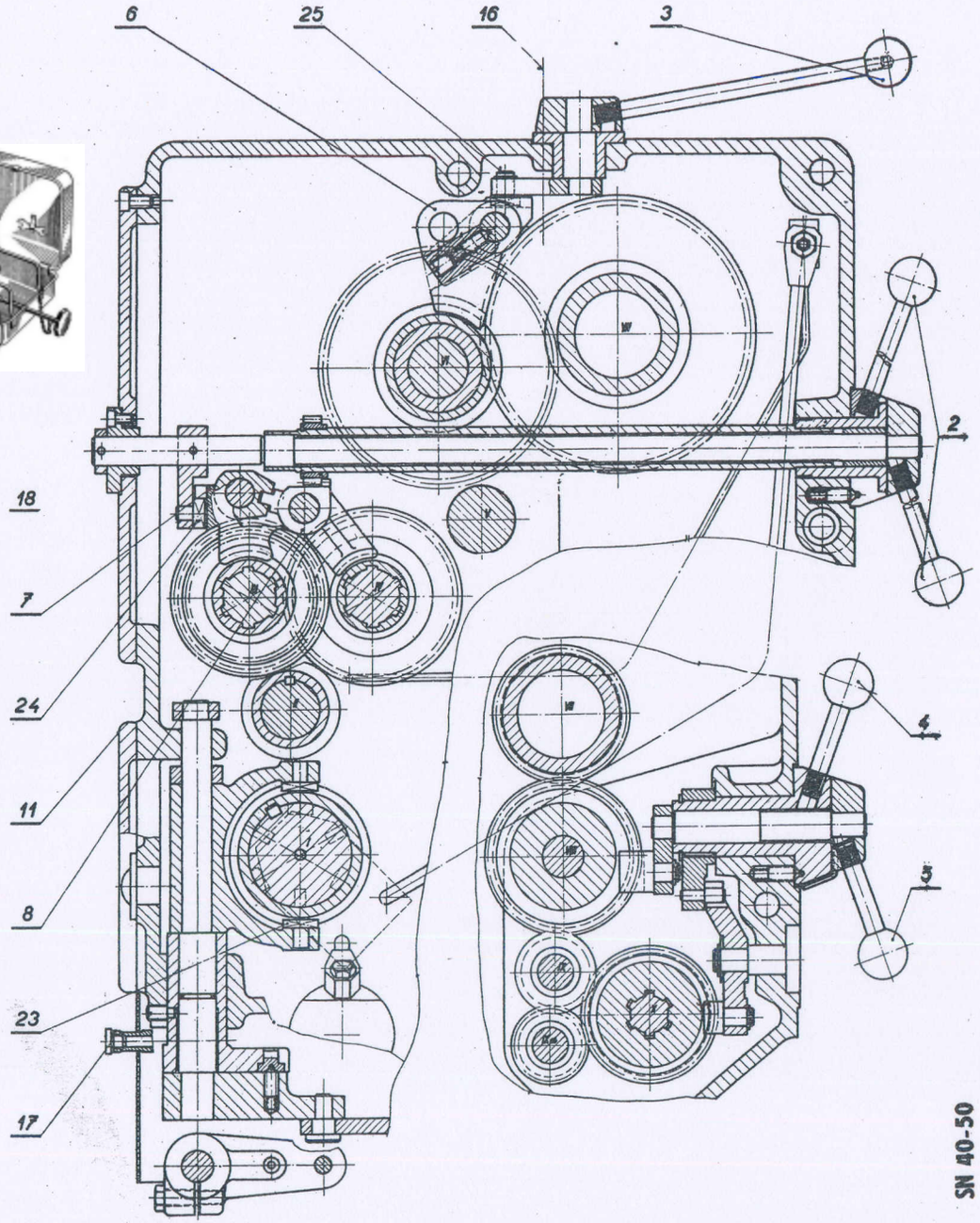
6
25
16
3
2
4
5
18
7
24
11
8
23
17

SN 40-50

12

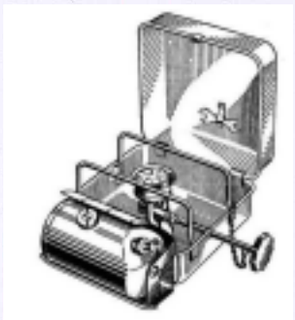

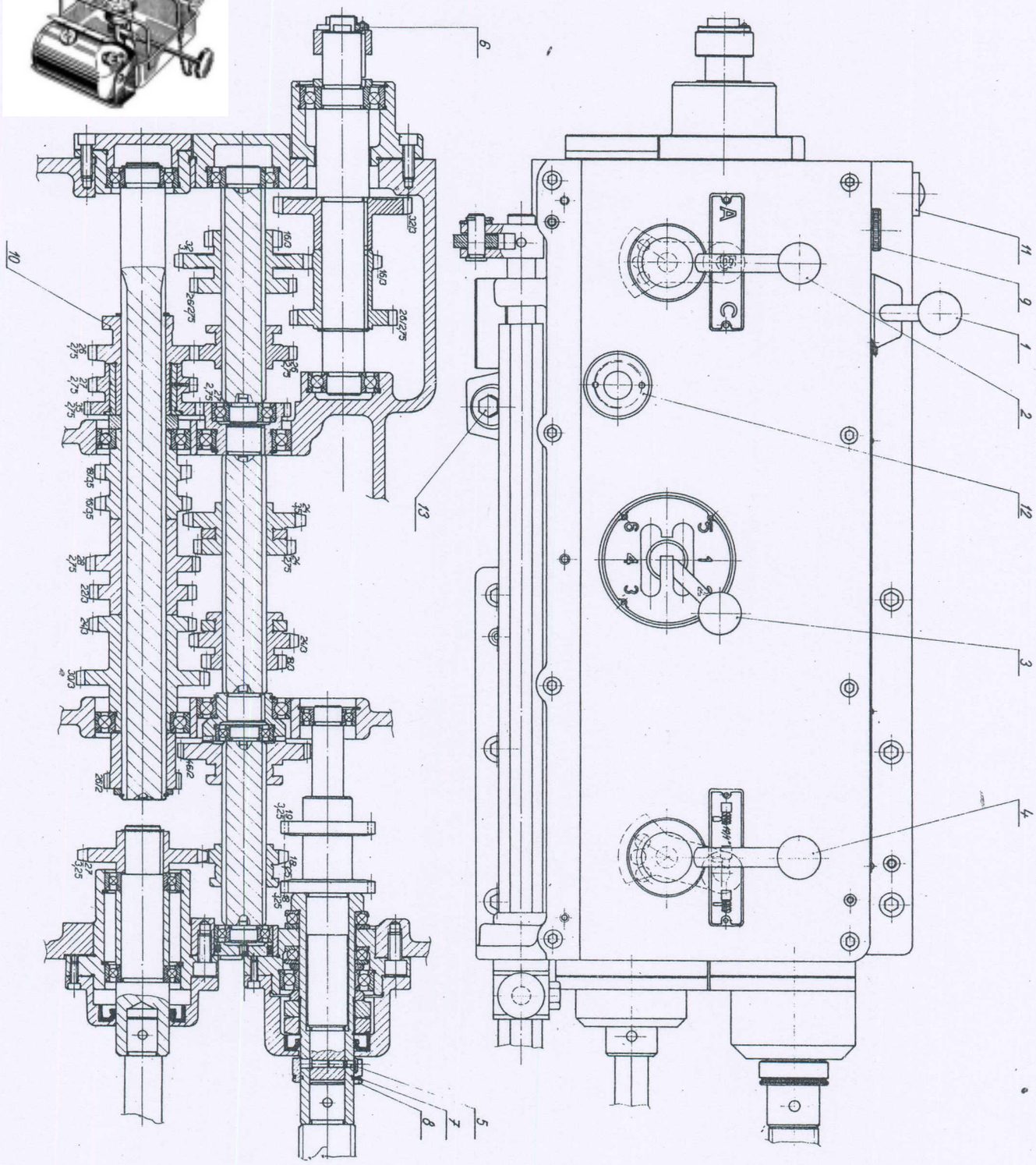
6
10
11
9
1
2
12
13
3
4
5
7
8

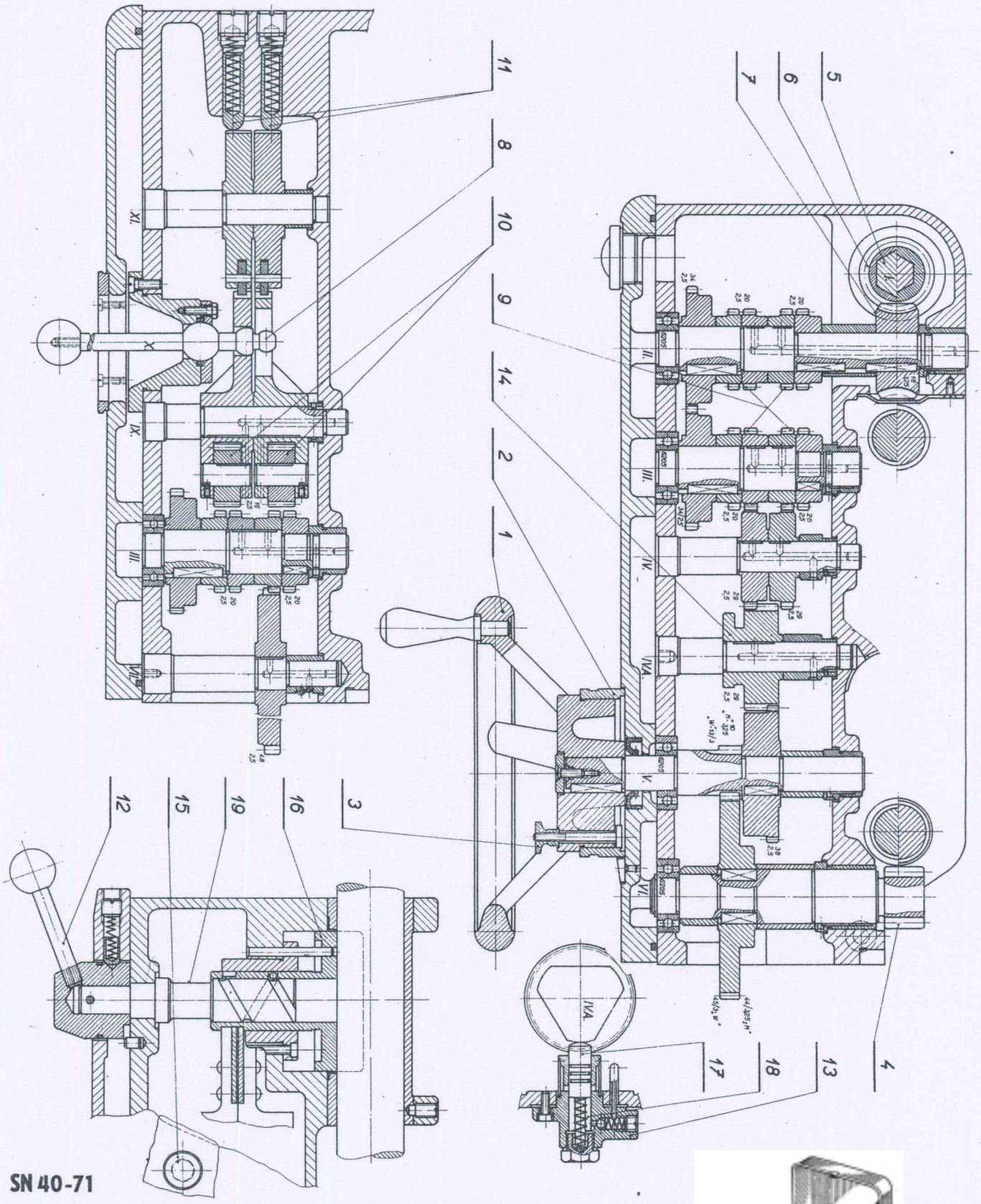

11
8
10
9
14
2
1
3
12
15
19
16
5
6
7
4
13
18
17
XI.
X.
IX.
III.
VII.
II.
III.
IV.
IV.A.
V.
VI.
IV.A.

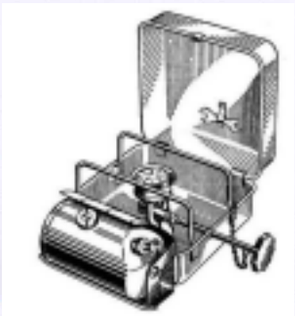

SN 40-71

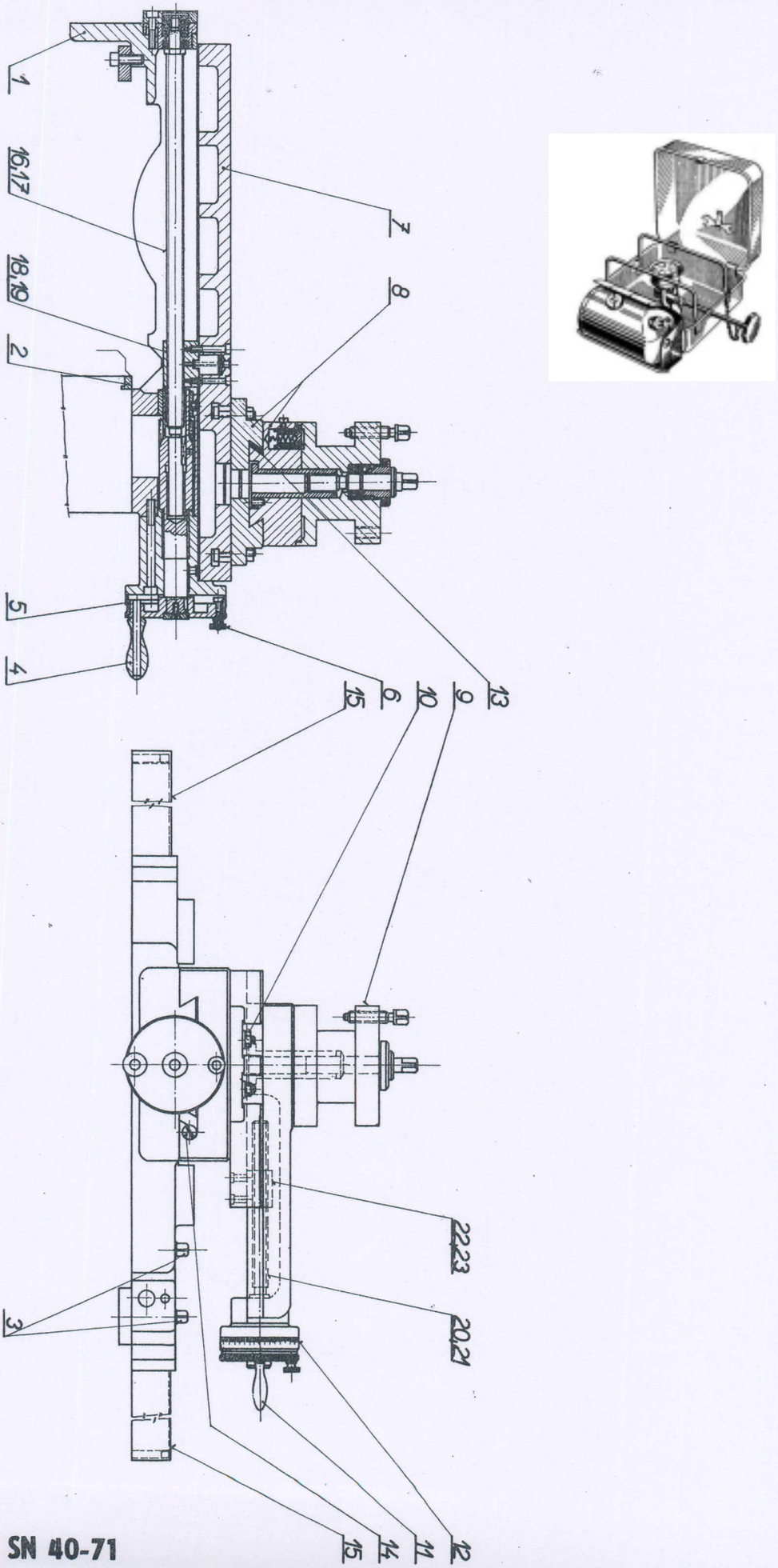
1
16.17
18.19
2
5
4
7
8
13
9
10
6
15
22.23
20.21
3
12
11
14
15

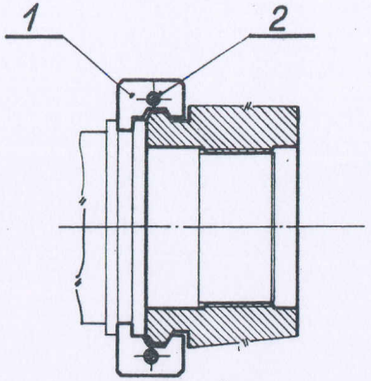

OBR. 16 d

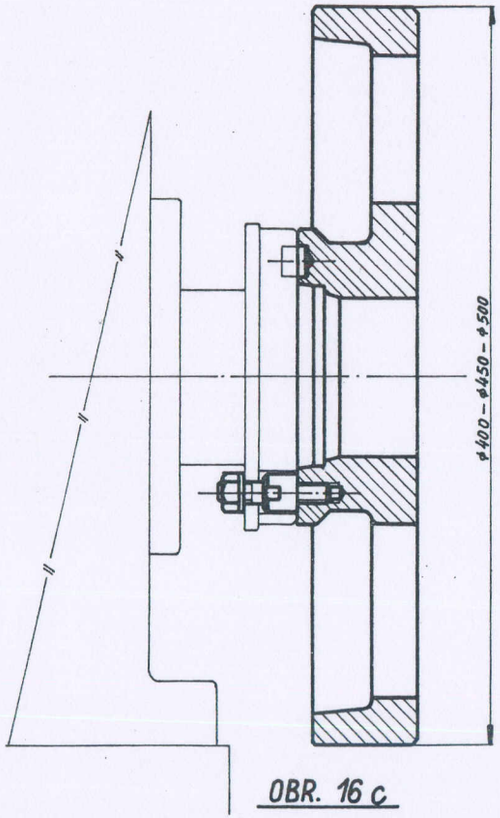

OBR. 16 c

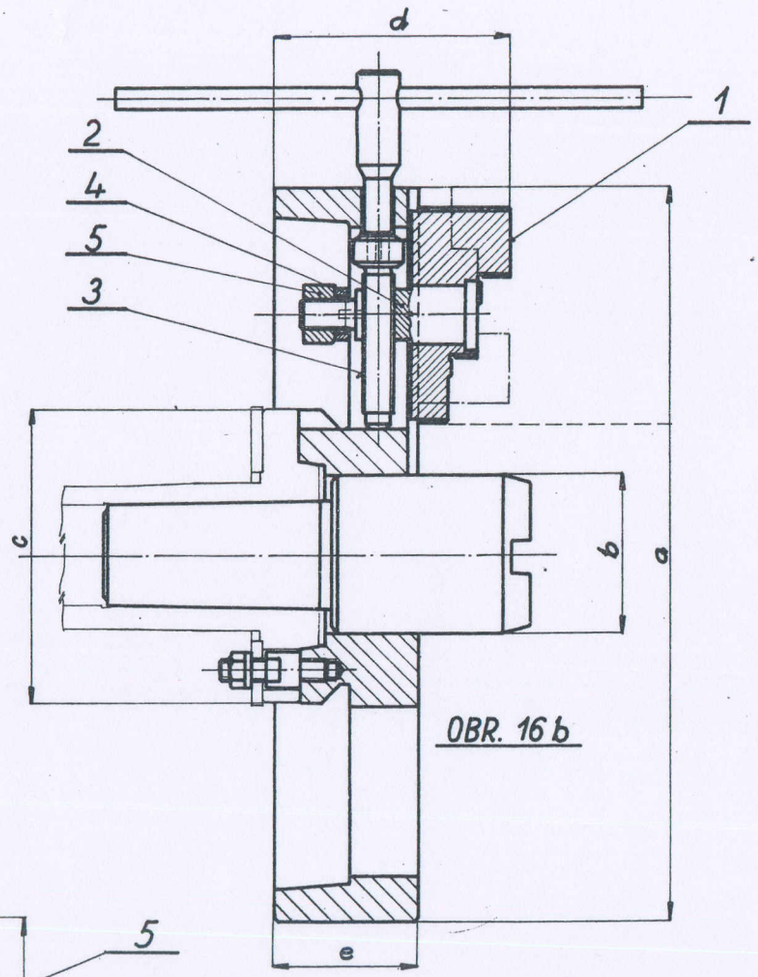

OBR. 16 b

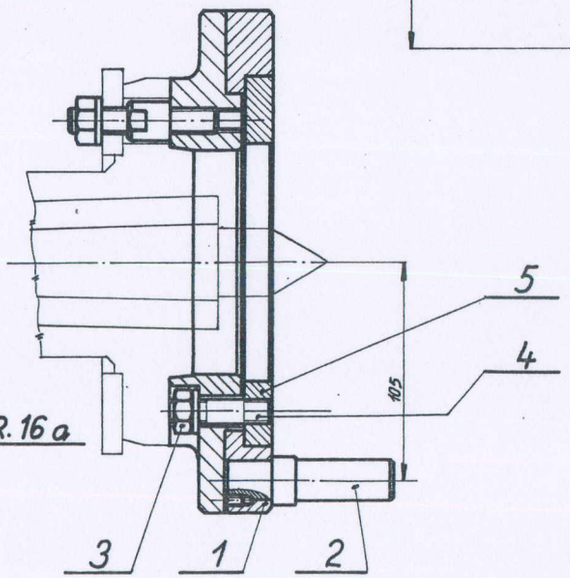

OBR. 16 a

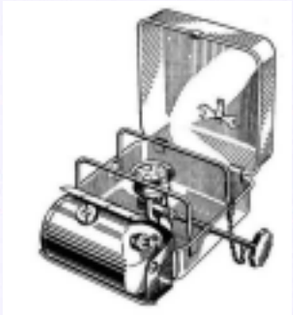

	a	b	c	d	e
SN40	75 – 400	90	170	139	85
SN45	75 – 450	90	170	139	85
SN50	75 – 500	90	170	139	85

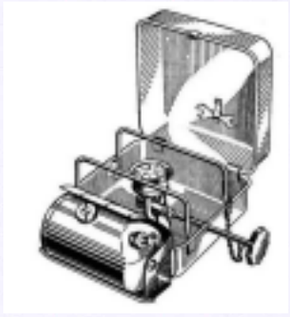

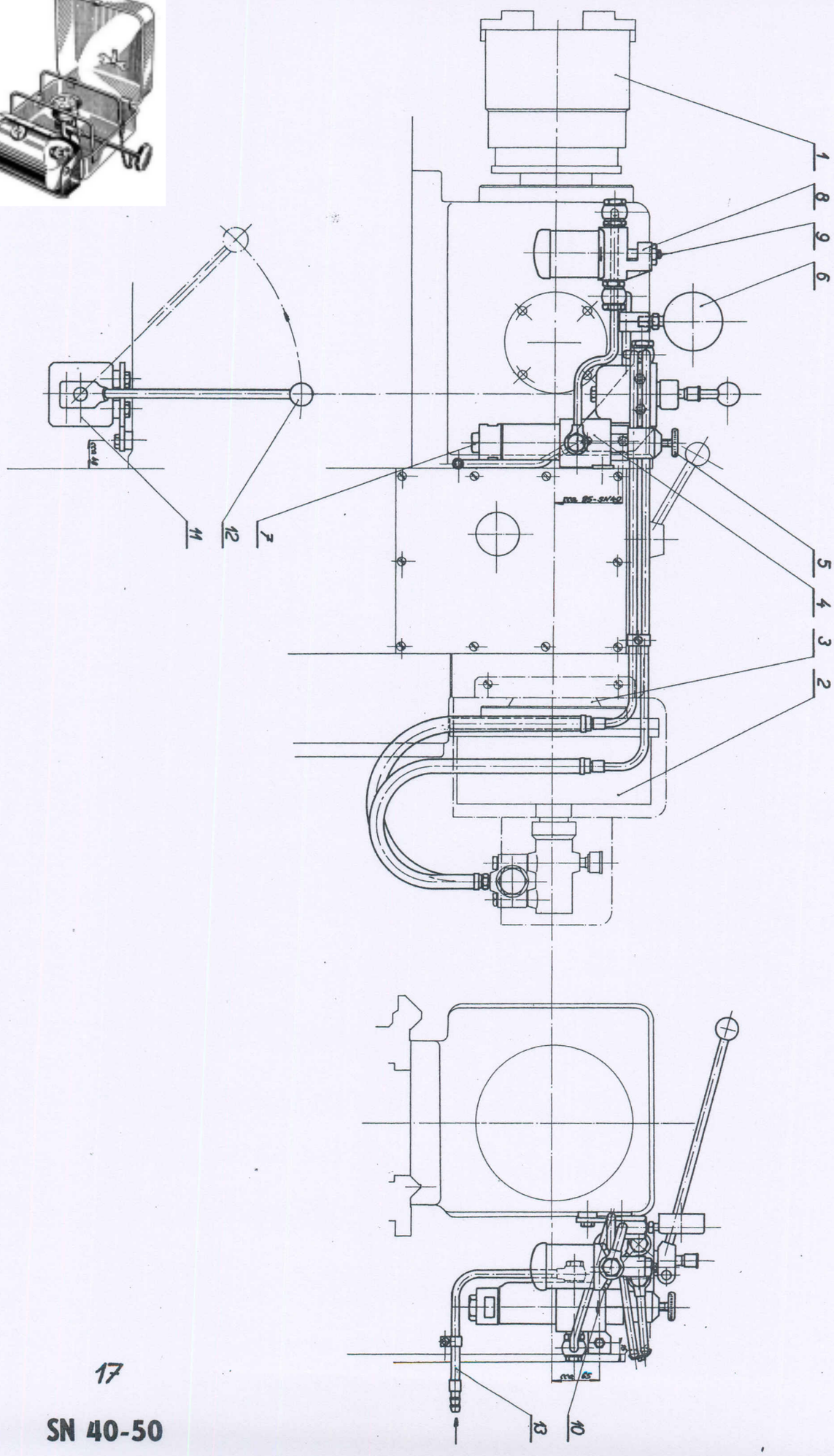
1
8
9
6
5
4
3
2
11
12
7
13
10

18a

18b

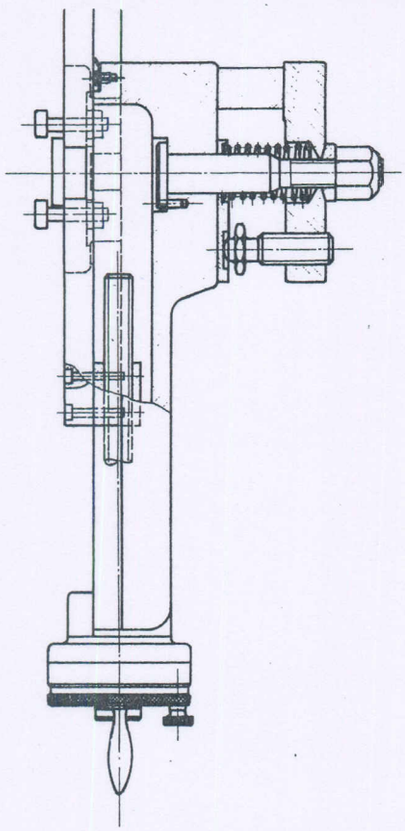

19 B.

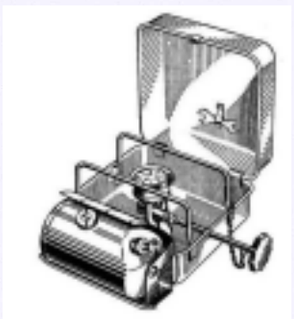

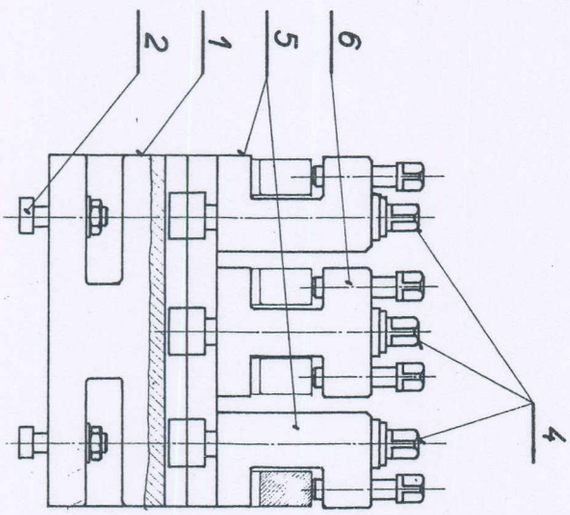

19 C.

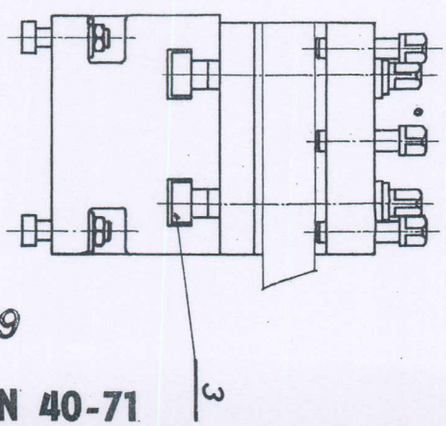

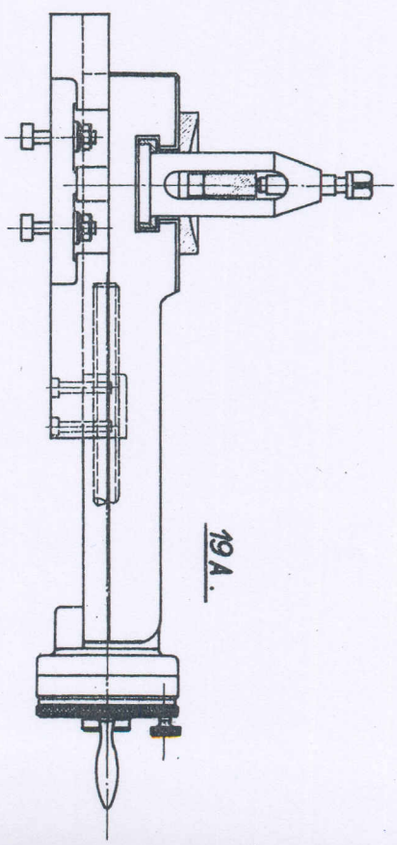

19 A.

19

SN 40-71

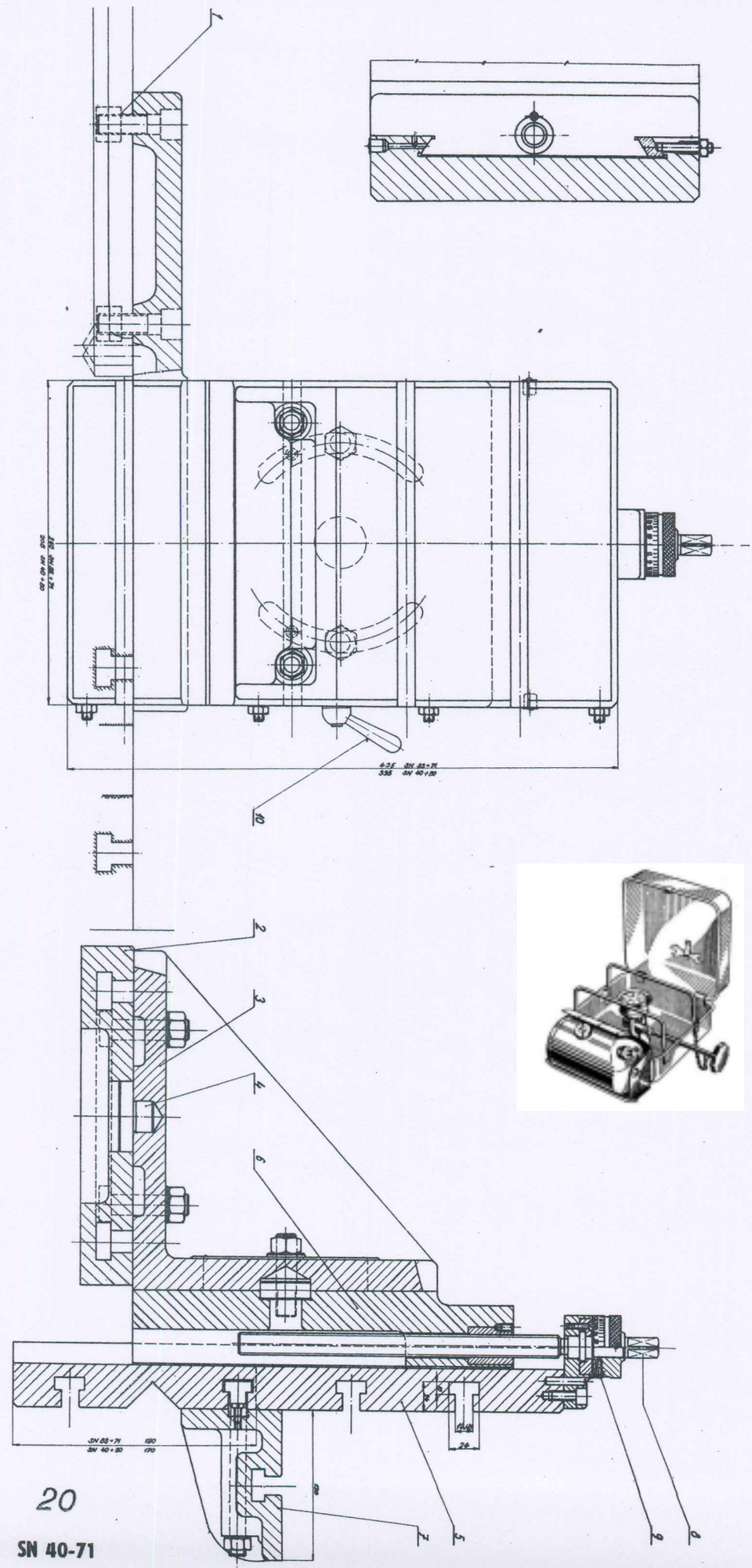

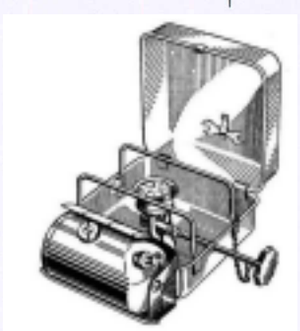

21

SN 40-71

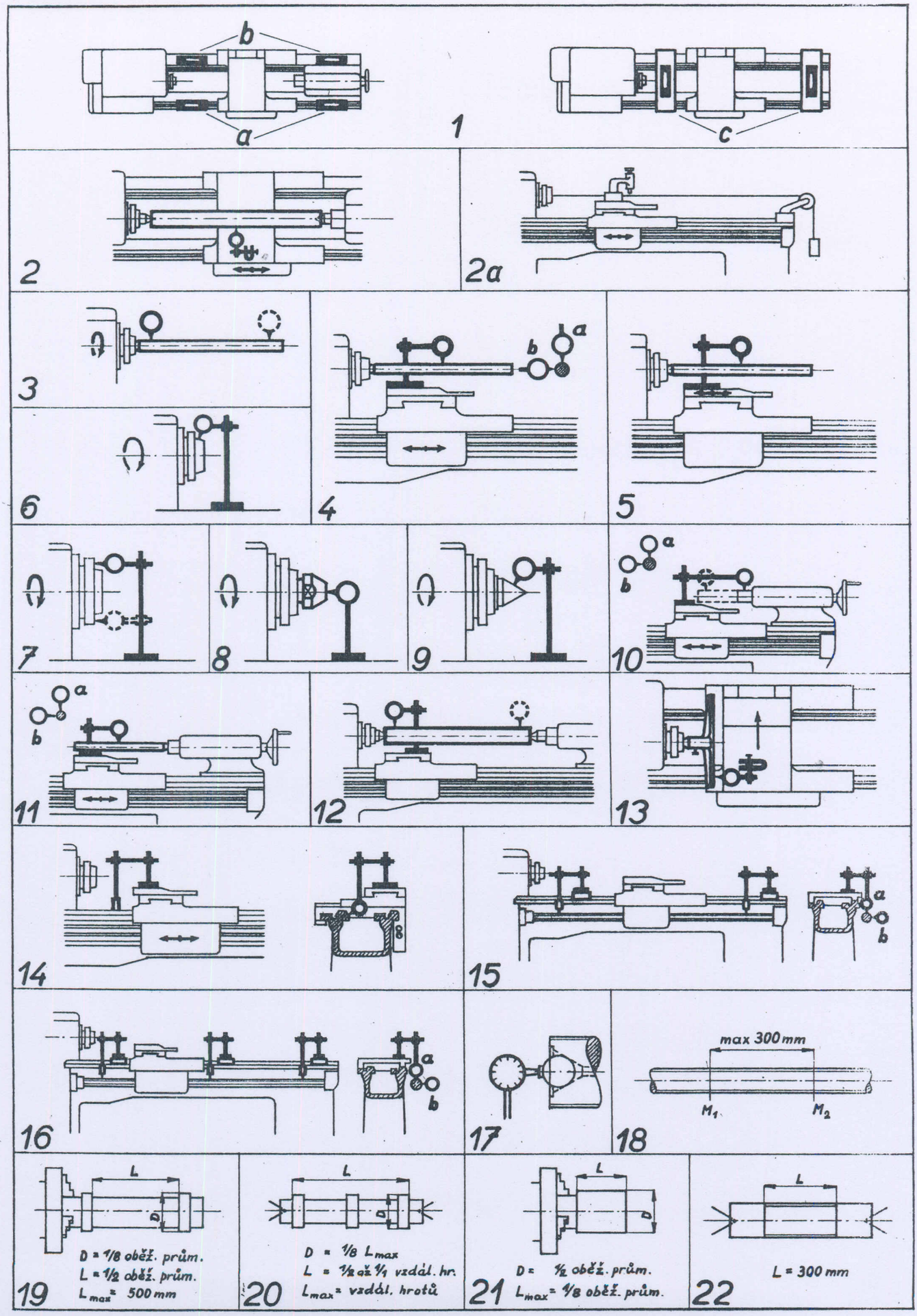
b
a
1
c
2
2a
3
6
4
b
a
5
7
8
9
10
b
a
11
b
a
12
13
14
15
a
b
16
a
b
17
18
max 300 mm
M1
M2
19
L
D = 1/8 oběž. prům.
L = 1/2 oběž. prům.
Lmax = 500 mm
20
L
D = 1/8 Lmax
L = 1/2 až 1/1 vzdál. hr.
Lmax = vzdál. hrotů
21
L
D = 1/2 oběž. prům.
Lmax = 1/8 oběž. prům.
22
L
L = 300 mm

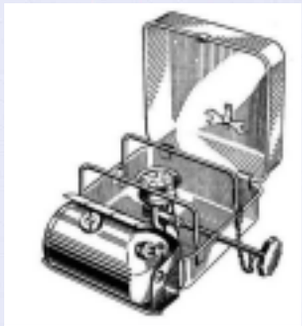

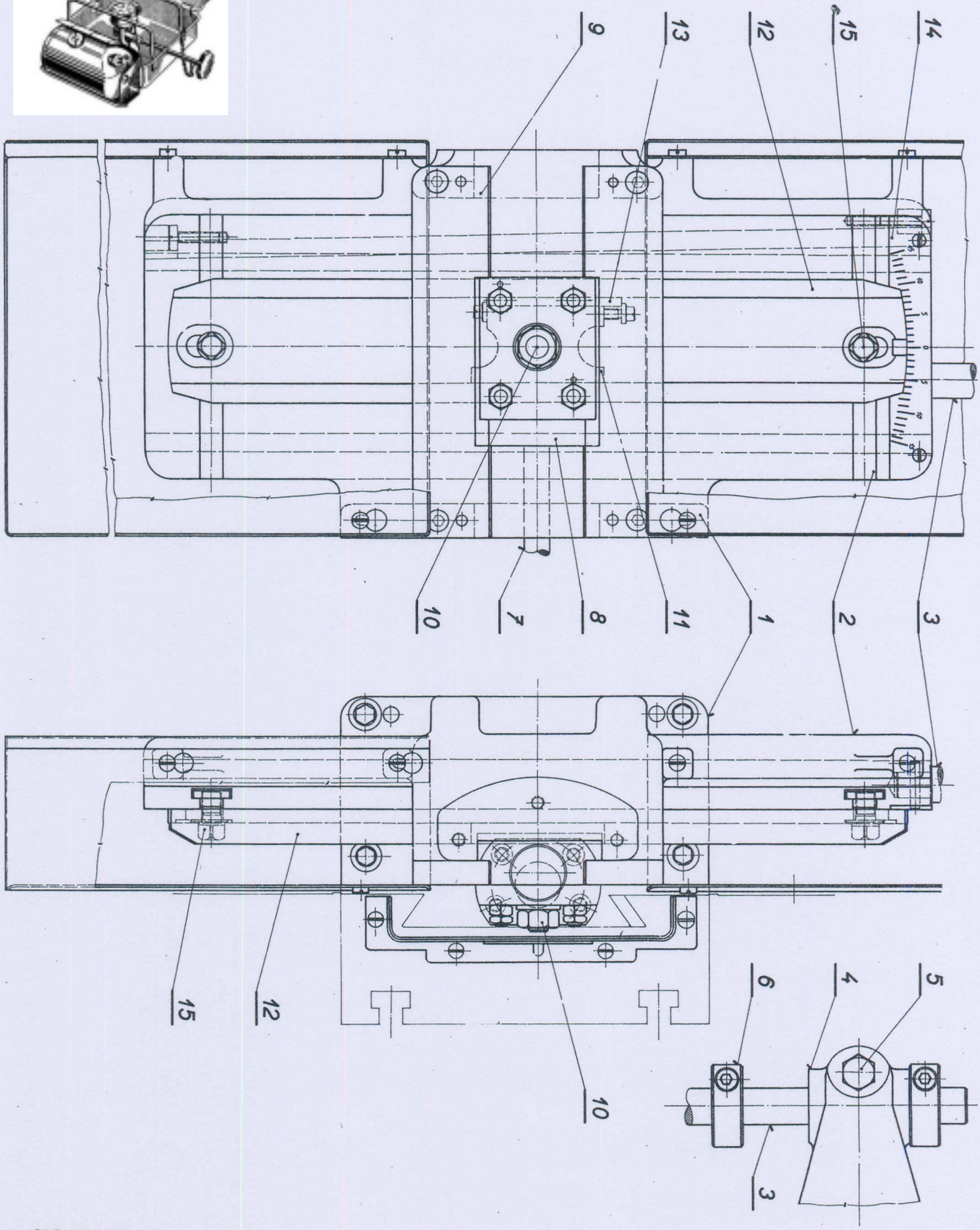
9
13
12
15
14
10
7
8
11
1
2
3
15
12
10
6
4
5
3

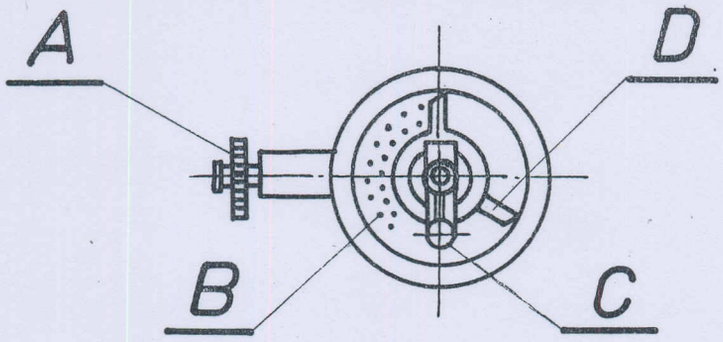

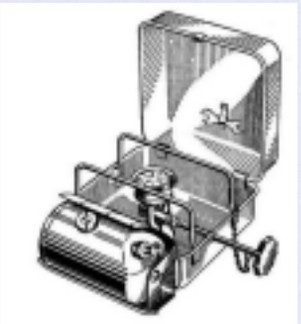

A	B	C	D	A	B	C	D	A	B	C	D
2		20		9	45	$4\frac{20}{45}$	89	15	91	$2\frac{78}{91}$	134
3	45	$13\frac{15}{45}$	67		63	$4\frac{28}{63}$			45	$2\frac{30}{45}$	
	63	$13\frac{21}{63}$			81	$4\frac{36}{81}$			63	$2\frac{42}{63}$	
	81	$13\frac{27}{81}$			99	$4\frac{44}{99}$			81	$2\frac{54}{81}$	
	99	$13\frac{33}{99}$		10		4			99	$2\frac{66}{99}$	
4		10		11	77	$3\frac{49}{77}$	128	16	96	$2\frac{48}{96}$	100
5		8			99	$3\frac{63}{99}$		17	51	$2\frac{18}{51}$	71
6	45	$6\frac{30}{45}$	134	12	45	$3\frac{15}{45}$	67	18	45	$2\frac{10}{45}$	45
	63	$6\frac{42}{63}$			63	$3\frac{21}{63}$			63	$2\frac{14}{63}$	
	81	$6\frac{54}{81}$			81	$3\frac{27}{81}$			81	$2\frac{18}{81}$	
	99	$6\frac{66}{99}$			99	$3\frac{33}{99}$			99	$2\frac{22}{99}$	
7	49	$5\frac{35}{49}$	143	13	39	$3\frac{3}{39}$	16	19	57	$2\frac{6}{57}$	22
	63	$5\frac{45}{63}$			91	$3\frac{7}{91}$		20		2	
	77	$5\frac{55}{77}$		14	49	$2\frac{42}{49}$	172	21	63	$1\frac{57}{63}$	181
	91	$5\frac{65}{91}$			63	$2\frac{54}{63}$		22	77	$1\frac{63}{77}$	64
8		5			77	$2\frac{66}{77}$			99	$1\frac{81}{99}$	

A	B	C	D	A	B	C	D	A	B	C	D
23	69	$1\frac{51}{69}$	148	33	99	$1\frac{21}{99}$	43	45	63	$\frac{56}{63}$	178
24	45	$1\frac{30}{45}$	134	34	51	$1\frac{9}{51}$	36		81	$\frac{72}{81}$	
	63	$1\frac{42}{63}$		35	49	$1\frac{7}{49}$	29		99	$\frac{88}{99}$	
	81	$1\frac{54}{81}$			63	$1\frac{9}{63}$		46	69	$\frac{60}{69}$	174
	99	$1\frac{66}{99}$			77	$1\frac{11}{77}$		47	47	$\frac{40}{47}$	171
25	45	$1\frac{27}{45}$	120		91	$1\frac{13}{91}$		48	96	$\frac{80}{96}$	167
26	39	$1\frac{21}{39}$	108	36	45	$1\frac{5}{45}$	23	49	49	$\frac{40}{49}$	164
	91	$1\frac{49}{91}$			63	$1\frac{7}{63}$		50	45	$\frac{36}{45}$	160
27	81	$1\frac{39}{81}$	97		81	$1\frac{9}{81}$		51	51	$\frac{40}{51}$	157
28	49	$1\frac{21}{49}$	86		99	$1\frac{11}{99}$		52	39	$\frac{30}{39}$	154
	63	$1\frac{27}{63}$		37	37	$1\frac{3}{37}$	17		91	$\frac{70}{91}$	
	77	$1\frac{33}{77}$		38	57	$1\frac{3}{57}$	11	53	53	$\frac{40}{53}$	151
	91	$1\frac{39}{91}$		39	39	$1\frac{1}{39}$	6	54	81	$\frac{60}{81}$	149
29	87	$1\frac{33}{87}$	76	40		1		55	77	$\frac{56}{77}$	146
30	45	$1\frac{15}{45}$	67	41	41	$\frac{40}{41}$	195		99	$\frac{72}{99}$	
	63	$1\frac{21}{63}$		42	63	$\frac{60}{63}$	191	56	49	$\frac{35}{49}$	143
	81	$1\frac{27}{81}$		43	43	$\frac{40}{43}$	186		63	$\frac{45}{63}$	
	99	$1\frac{33}{99}$		44	77	$\frac{70}{77}$	182		77	$\frac{55}{77}$	
31	93	$1\frac{27}{93}$	58		99	$\frac{90}{99}$			91	$\frac{65}{91}$	
32	96	$1\frac{24}{96}$	50		45	$\frac{40}{45}$	178	57	57	$\frac{40}{57}$	141

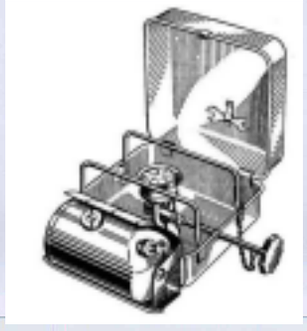

A	B	C	D	A	B	C	D	A	B	C	D
58	87	60/87	138	71	71	40/71	113	88	77	35/77	91
59	59	40/59	136	72	45	25/45	112		99	45/99	
60	45	30/45	134		63	35/63		89	89	40/89	90
	63	42/63			81	45/81		90	45	20/45	89
	81	54/81			99	55/99			63	28/63	
	99	66/99		73	73	40/73	110		81	36/81	
61	61	40/61	132	74	37	20/37	109		99	44/99	
62	93	60/93	130	75	45	24/45	107	91	91	40/91	88
63	63	40/63	127	76	57	30/57	106	92	69	30/69	87
64	96	60/96	125	77	77	40/77	104	93	93	40/93	87
65	39	24/39	124	78	39	20/39	103	94	47	20/47	86
	91	56/91		79	79	40/79	102	95	57	24/57	85
66	99	60/99	122	80	96	48/96	100	96	96	40/96	84
67	67	40/67	120	81	81	40/81	99	97	97	40/97	83
68	51	30/51	118	82	41	20/41	98	98	49	20/49	82
69	69	40/69	116	83	83	40/83	97	99	99	40/99	81
70	49	28/49	115	84	63	30/63	96	100	45	18/45	80
	63	36/63		85	51	24/51	95				
	77	44/77		86	43	20/43	94				
	91	52/91		87	87	40/87	92				

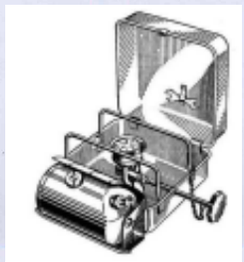

SN 40-71

24c

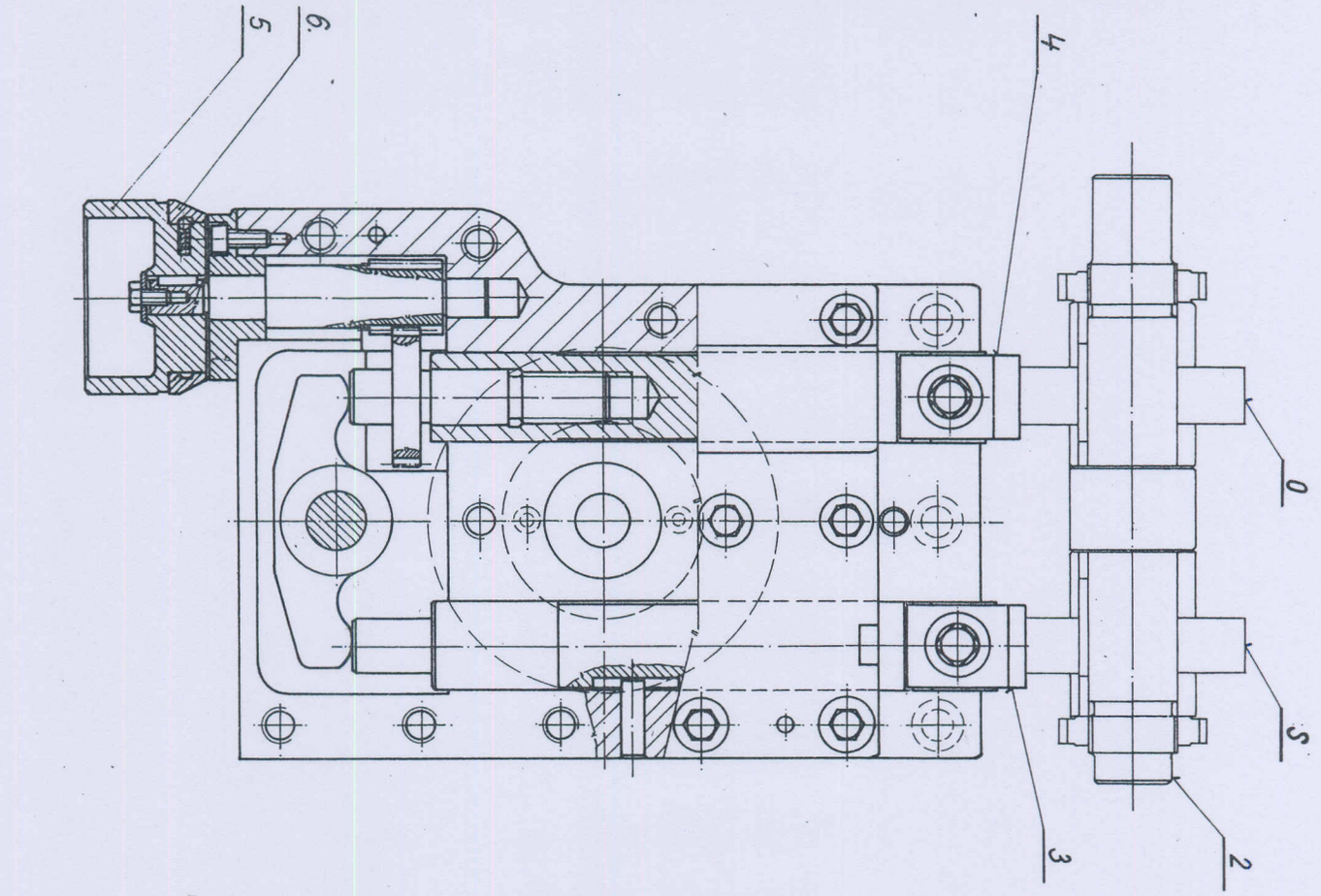
5
6
4
0
3
2

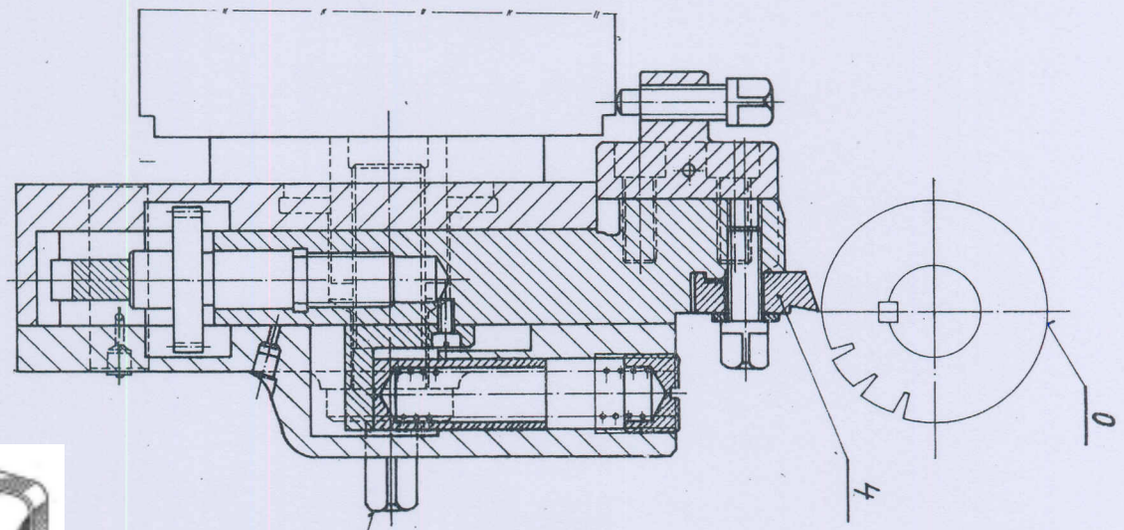
0
4

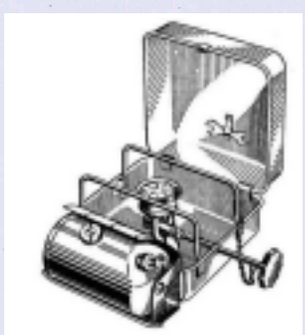

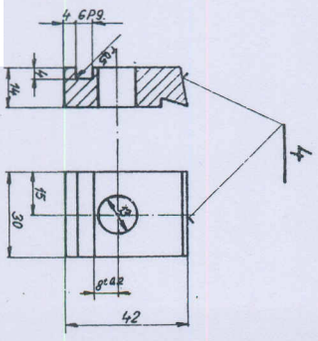
4 6P9
4
15
30
42

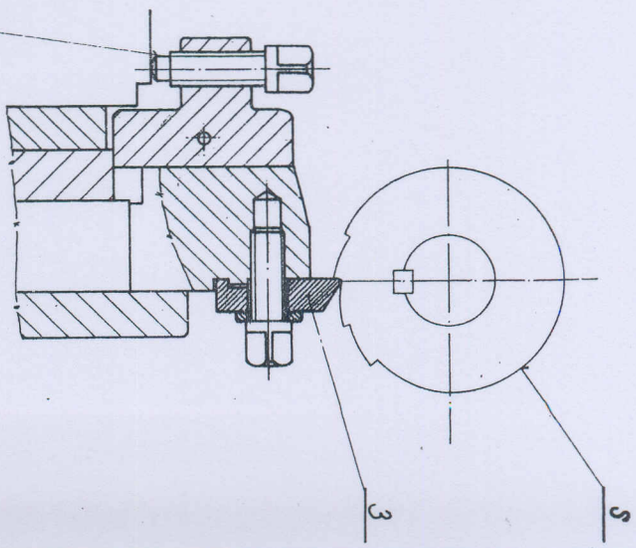
1
3
5

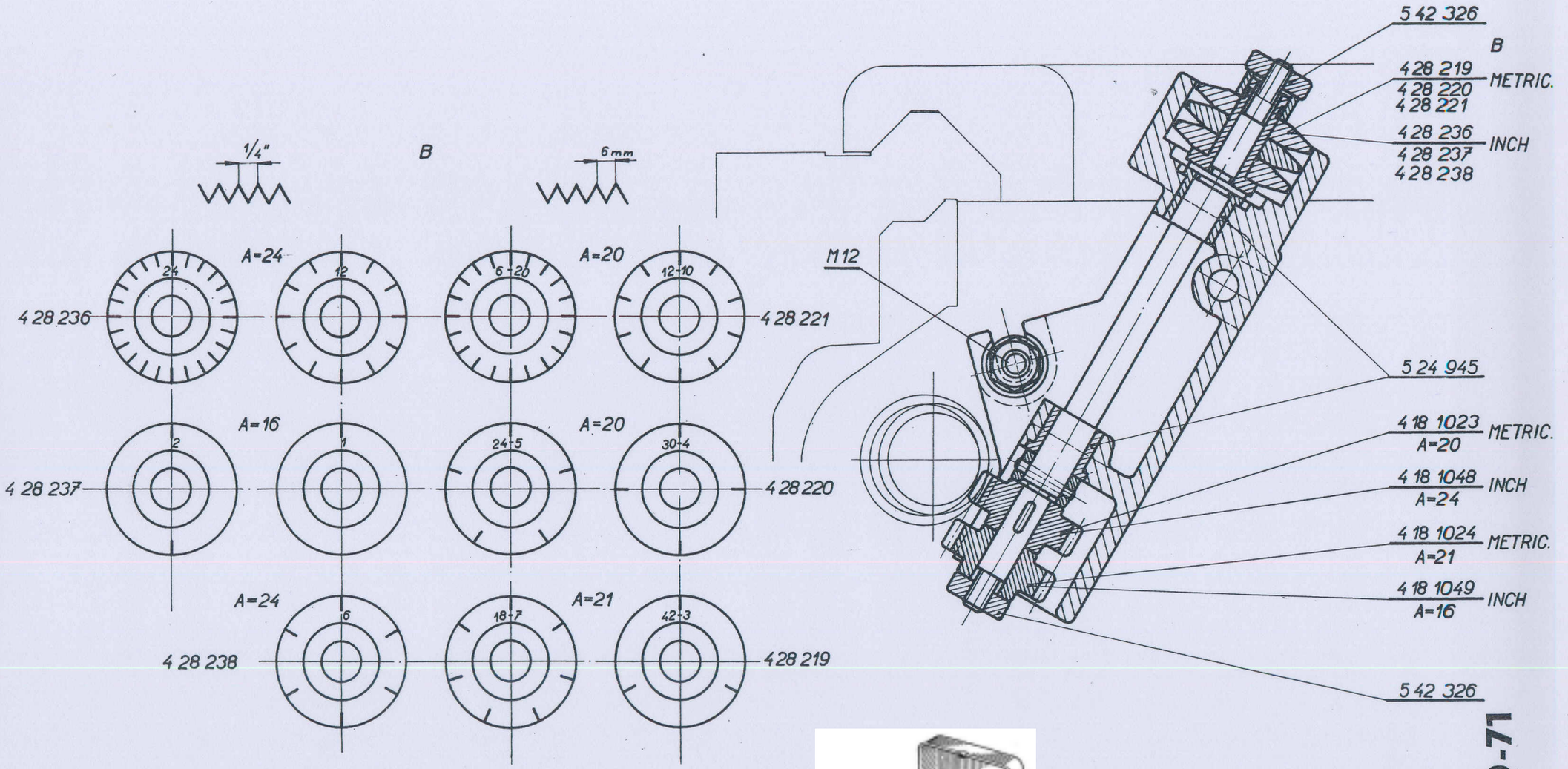
1/4"
B
6 mm
A=24
A=20
24
12
6-20
12-10
4 28 236
4 28 221
A=16
A=20
2
1
24-5
30-4
4 28 237
4 28 220
A=24
A=21
6
18-7
42-3
4 28 238
4 28 219
M12
5 42 326
B
4 28 219
4 28 220
4 28 221
METRIC.
4 28 236
4 28 237
4 28 238
INCH
5 24 945
4 18 1023
A=20
METRIC.
4 18 1048
A=24
INCH
4 18 1024
A=21
METRIC.
4 18 1049
A=16
INCH
5 42 326

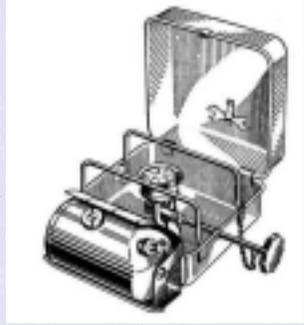

SN 40-71

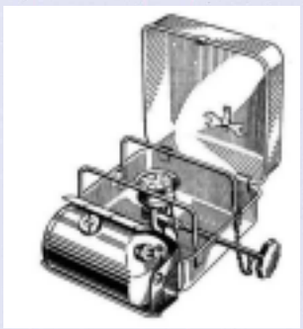

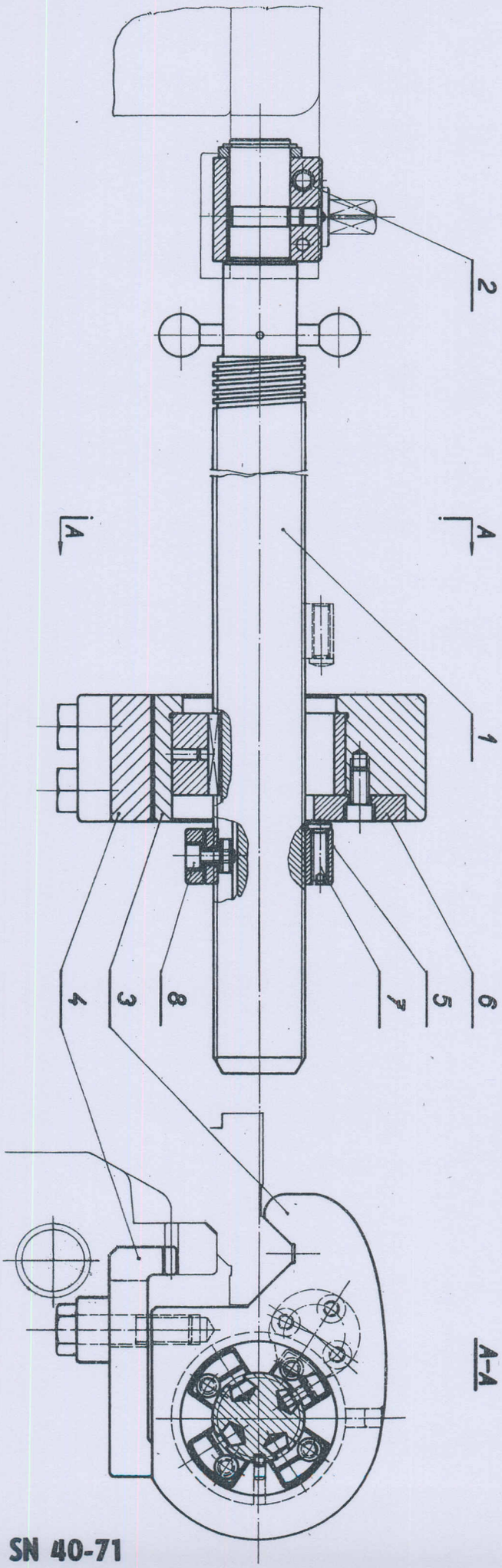
A
A
2
1
4
3
8
7
5
6
A-A

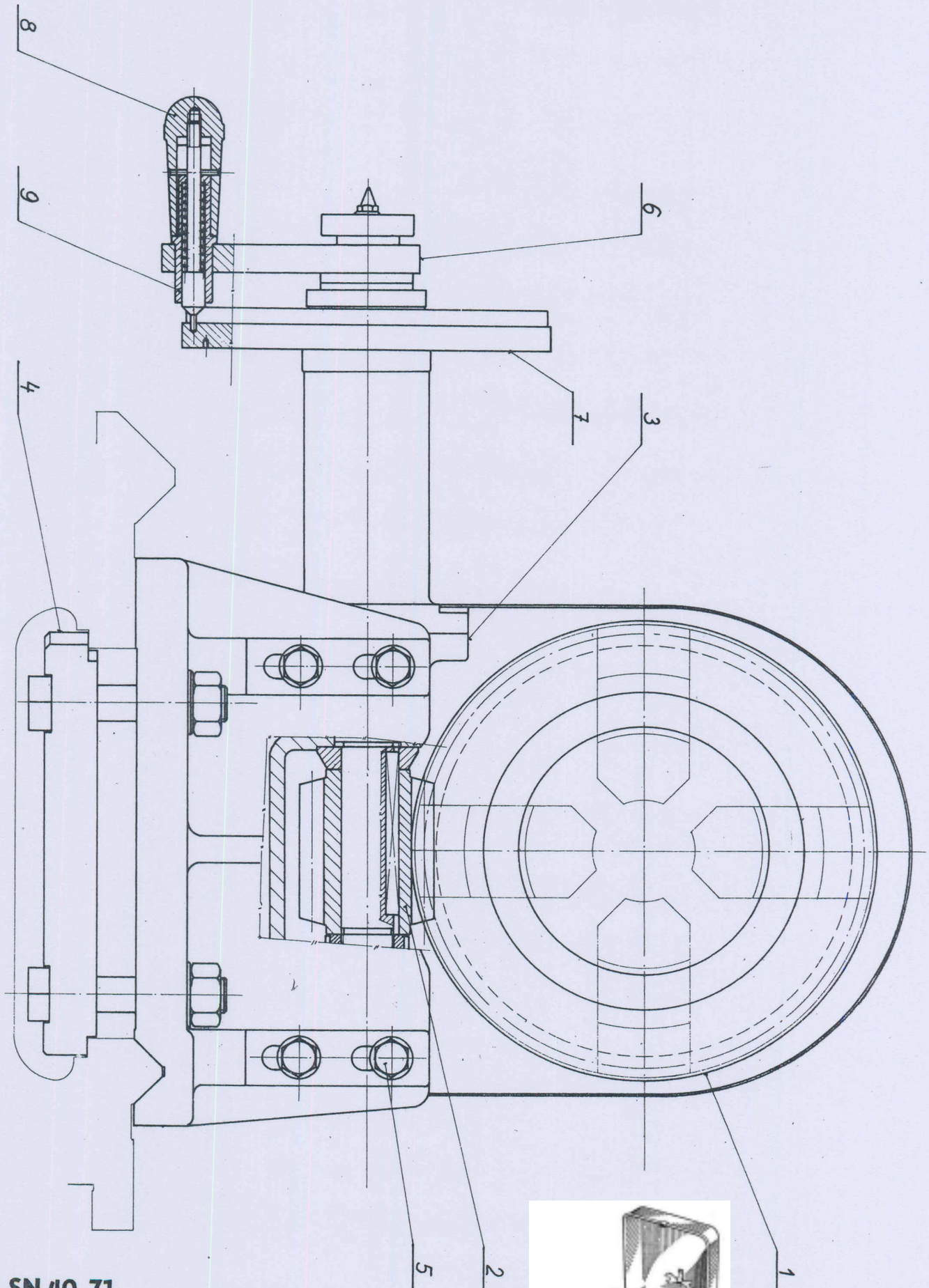
8
9
6
7
4
3
5
2
1

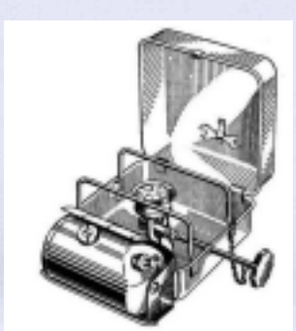

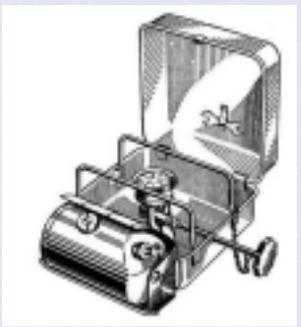

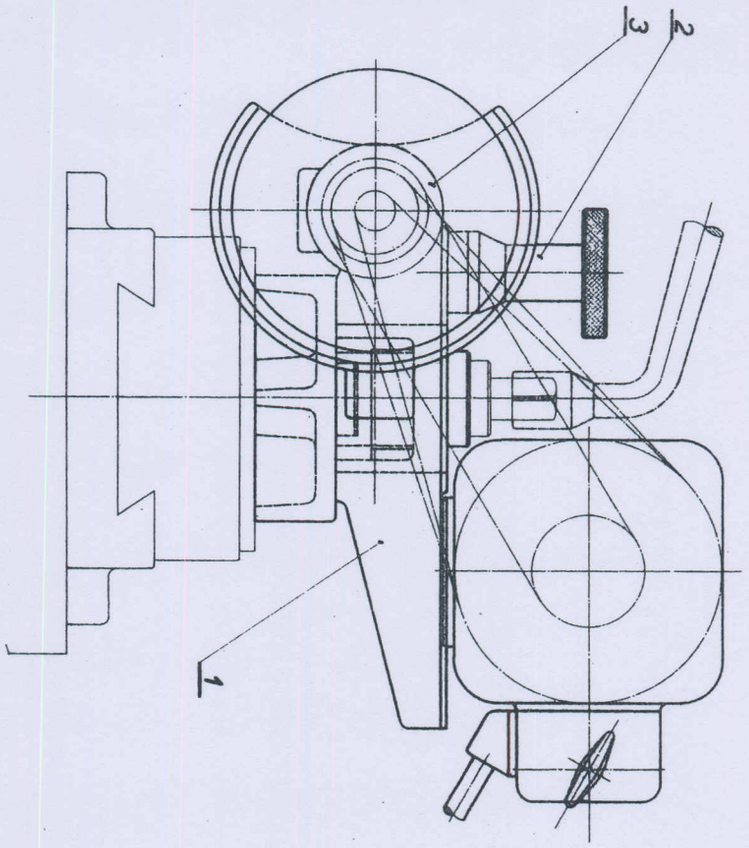
3
2
1

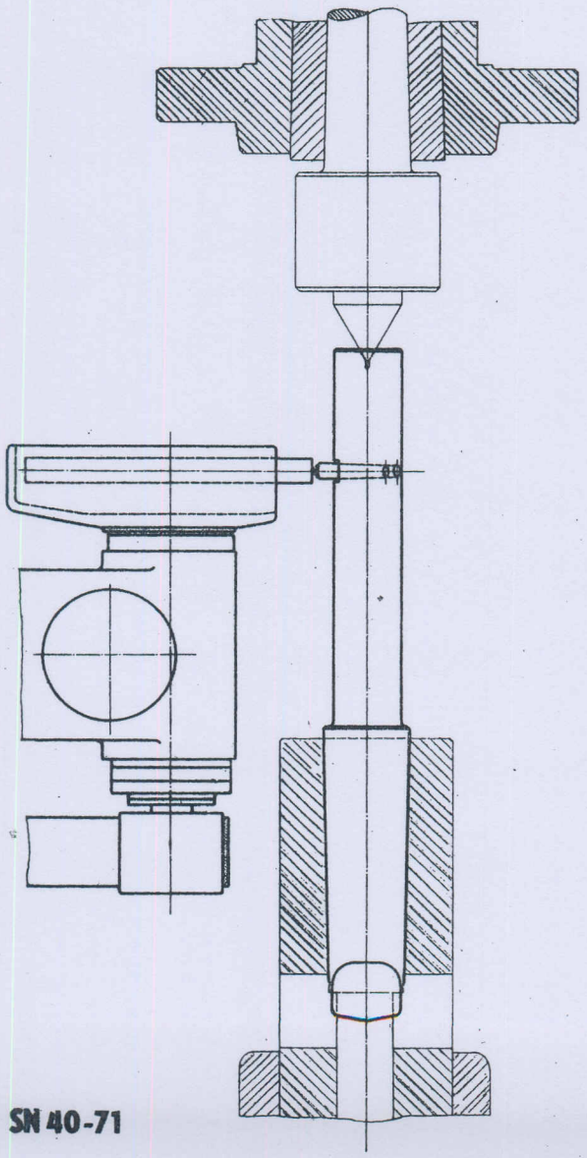

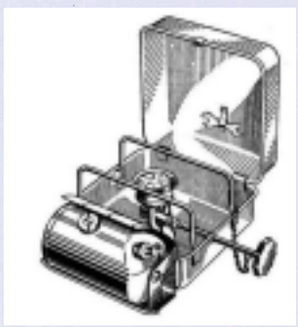

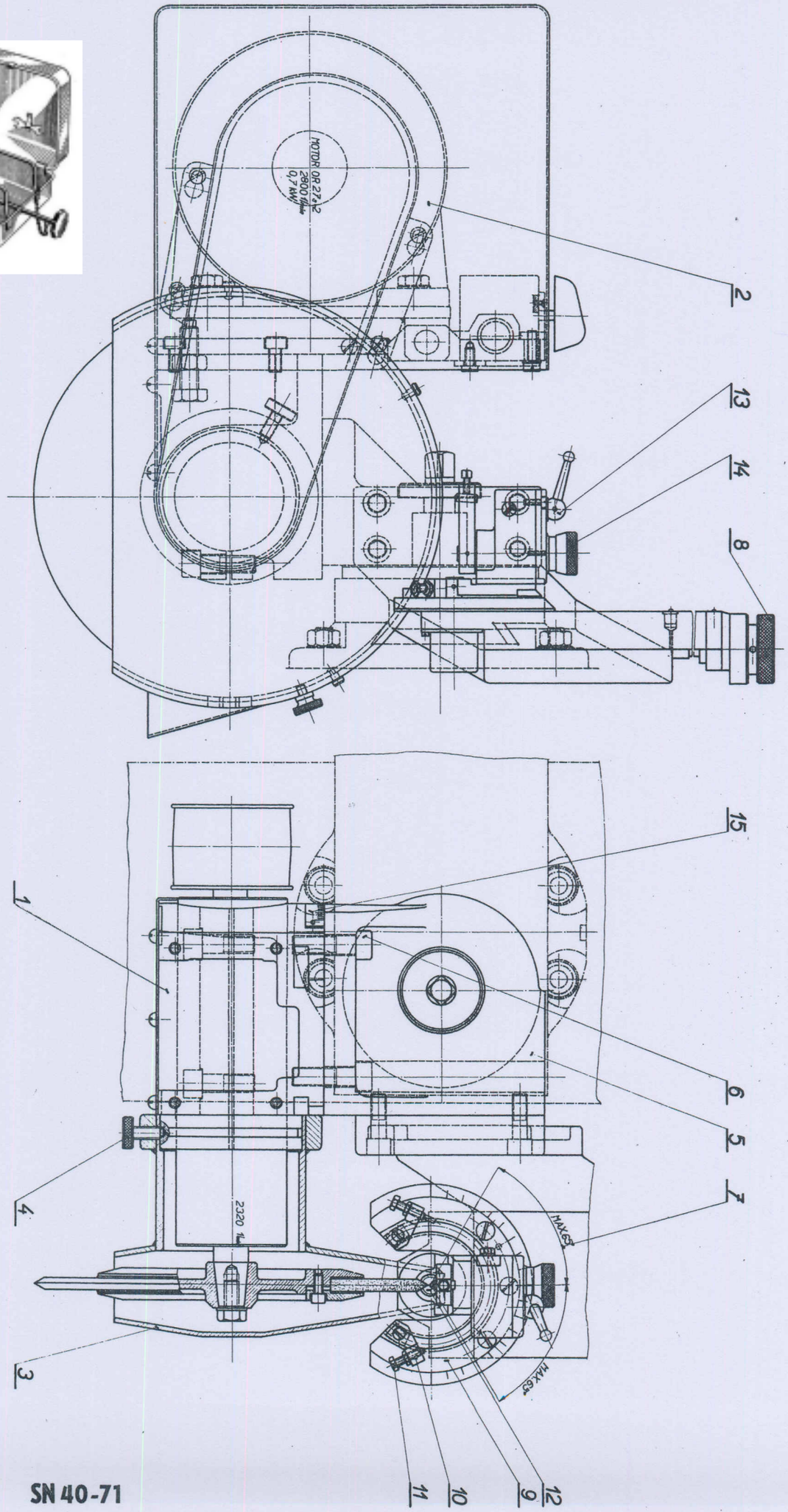
MOTOR OR 27 2
2800 1/min
0,7 kW
2
13
14
8
15
1
6
5
7
4
2320 1/min
MAX 65°
MAX 65°
3
11
10
9
12

SN 40-71

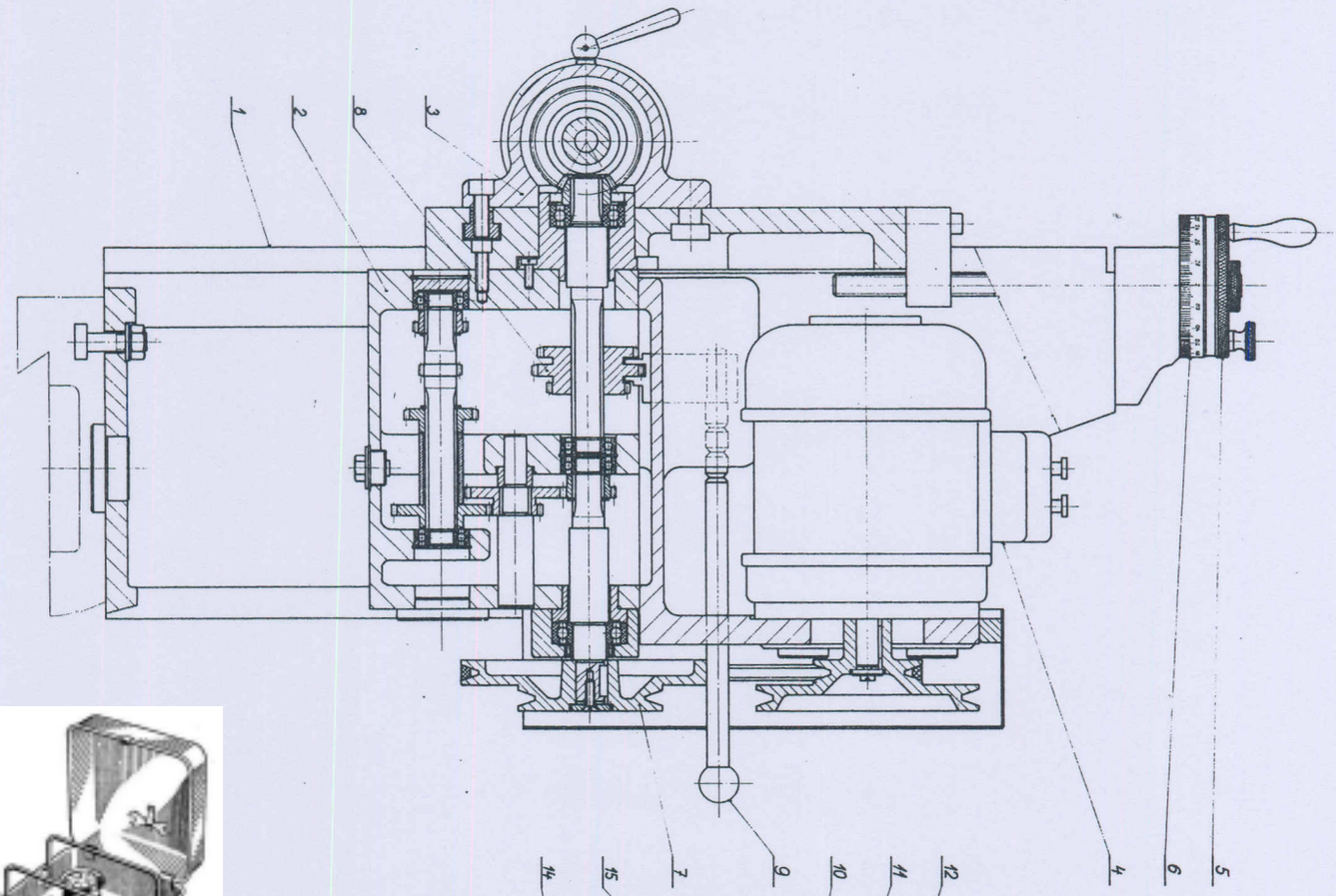
1
2
8
3
7
9
10
11
12
4
6
5

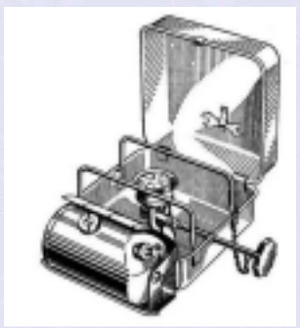

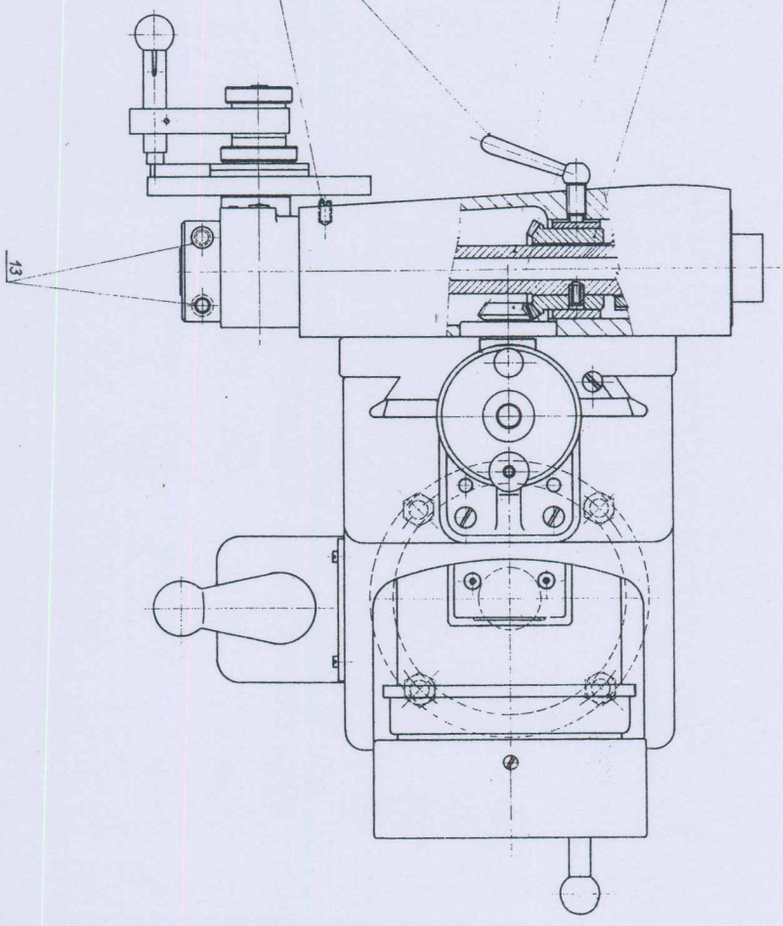
14
15
13