Boxford

Lathes

Parts List

Boxford Machine Tools Ltd., Wheatley,
Halifax, Yorkshire, England HX3 5AF.
Tel. 0422 58311/3. Telex 517410.
Grams. Boxford Halifax.

Boxford

LATHE PARTS

1	Bed (36″, 42″, 48″).
3	Headstock (Bench & Mk I Lathes).
3TUD	Headstock (Training Lathe).
4	Tailstock.
5	Saddle.
6	Cross Slide.
7	Compound Rest Slide.
8	Tool Slide.
9	Compound Rest Lead Screw (English).
9M	Compound Rest Lead Screw (Metric).
10	Tool Slide Bush.
11	Dial (English).
11D	Dial (English-Direct Reading).
11M	Dial (Metric).
11MD	Dial (Metric-Direct Reading).
11V	Dial (Milling Attachment).
11MV	Dial (Milling Attachment—metric).
12	Tool Slide Handle.
13	Locknut.
14	Tool Slide Gib Strip.
15	Tool Slide Nut (English).
15M	Tool Slide Nut (Metric).
16	Clamp Slug.
17	Cross Slide Handle.
18	Cross Slide Bush.
19	Cross Slide Nut (English).
19M	Cross Slide Nut (Metric).
20	Cross Slide Dial (English).
20M	Criss Slide Dial (Metric).
21	Cross Slide Gib Strip.
21S	"T" Slot Cross Slide Gib Strip.
22A	Lead Screw (English "A" Model 36″, 42″, 48″).
22B	Lead Screw (English "B" Model 36″, 42″, 48″).
22MB	Lead Screw (Metric "B" Model 36″, 42″, 48″).
22C	Lead Screw (English "C" Model 36″, 42″, 48″).
22MC	Lead Screw (Metric "C" Model 36″, 42″, 48″).
23	Split Nut Lever.
24A	Cross Slide Lead Screw (English "A" & "B" Models).
24MA	Cross Slide Lead Screw (Metric "A" & "B" Models).
24C	Cross Slide Lead Screw (English "C" Model).
24MC	Cross Slide Lead Screw (Metric "C" Model).
25	Split Nut (Top Half—English).
25M	Split Nut (Top Half—Metric).
26	Split Nut (Bottom Half—English).
26M	Split Nut (Bottom Half—Metric).
27	Saddle Gib.
28	Tailstock Clamp.
29	Apron Handwheel Pinion.
30	Half Nut Pivot.
31	Apron Handwheel.
32	Tailstock Handwheel.
33	Idler Gear 80T.
34	Large Gear 72T. } Compound.
35	Small Gear 18T. } Compound.
36	Change Gear 16T.
37	Change Gear 24T.
38	Change Gear 32T.
39	Change Gear 36T.
40	Change Gear 40T.
41	Change Gear 44T.
42	Change Gear 46T.
43	Change Gear 48T.
44	Change Gear 52T.
45	Change Gear 54T.
46	Change Gear 56T.
47	Change Gear 60T.
49	Change Gear 80T.
50	Tailstock Base.
51	Tailstock Lead Screw.
52	Tailstock Spindle (English).
52M	Tailstock Spindle (Metric).
53	Tailstock Stud.
54	Tailstock Handle.
55	Apron Cross Feed Gear 57T.
56	Apron Cross Feed Gear 22T.
57	Apron Idler Gear.
58	Rack Pinion Gear.
59	Apron Rack Pinion.
60	Apron Feed Pinion.
61	Apron ("A" & "B" Models).
62	Worm.
63	Worm Wheel.
64	Apron Clutch Disc.
65	Apron Clutch Disc (inner).
66	Apron Clutch Screw.
67	Apron Clutch Screw Pin.
68	Worm Locknut.
69	Apron Clutch Knob.
70	Retaining Screw.
71	Split Nut Pin.
72	Split Nut Lever Pin.
73	Rack Pinion Stud.
74	Idler Gear Shifter.
75	Gear Shifter Lever.
76	Gear Shifter Knob.
77	Gear Shifter Knob Plunger.
78	Auto Cross Feed Stud.
79	Apron Worm Cover.
80	Idler Gear Shifter Lever.
82	Change Gear Quadrant.
83	Tailstock Bush.
84	Lead Screw Bracket (Front—"B" & "C" Models).
85	Lead Screw Bracket (Rear).
86	Headstock Clamp.
88	Washer.
89	Reverse Gear Stud.
90	Reverse Gear (Steel—14½° P.A.)
90A	Reverse Gear (Steel—20° P.A.)
90T	Reverse Gear (Fibre—14½° P.A.)

90TA Reverse Gear (Fibre—20° P.A.)
91 Reverse Gear follower (14½° P.A.)
91A Reverse Gear follower (20° P.A.)
92 Stud Gear Spindle.
93 Rack (For 36″, 42″ or 48″).
94 Back Gear Handle.
95 Tailstock Nut.
96 Pad.
97 Retaining Pin.
98 Stop Pin.
99 Thread Indicator Body.
101 Plain Apron ("C" Model).
101P Plain Apron (Training Lathe).
102 Front Cover Plate.
103 Rear Cover Plate.
104 Large Back Gear.
105 Back Gear Sleeve.
106 Spindle Fixed Gear.
107 Spindle Sliding Gear.
108 Gear Shifter Eccentric.
109 Shoe.
110 Cover Bracket.
111 Indicator Worm Wheel.
112 Thread Indicator Shaft.
113 Thread Indicator Dial.
115 Main Spindle.
116 Eccentric Bush.
117 Spacing Washer.
117S Spacing Washer (Training Lathe).
118 Thrower.
119 Locknut.
120 Spacing Washer.
122 Nose Cap.
123 Catch Plate.
124 Sleeve.
125 Tailstock Centre.
126 Headstock Centre.
127 Tool Post.
128 Tool Post Block.
129 Tool Post Ring.
130 Tool Post Screw.
131 Tool Post Wedge.
132 Guard Fastening Piece.
133 Guard Thumb Screw.
134 Change Gear Guard.
140 Saddle Clamp.
141 End Plate.
142 Motor Platform.
144 Spindle End Cover.
145 Spacing Washer.
147 Guard Extension.
148 Spindle Locking Key.
149 Countershaft Drive Pulley.
150 Motor Pulley.
151 Pin (Compound Gears).
152 Bolt.
153 Eccentric Bush.
154 Change Gear Bush.
155 Taper Point Grub Screw.
156 Clamp Slug.
157 Cabinet (Pre-June 1957).
158 Cabinet Base.
160 Indicator Pin.
161 Standard Switch.
163 Guard Pin.
164 Back Gear Shaft.
165 Fixed Gear Pin.
166 Spacing Washer.
167 Gear Spacing Washer.
168 Screwcutting Chart (B & C Models).
169 Tailstock Button Key.
170 Motor Bracket Support.
171 Scroll.
173 Oil Feed Tube.
184 Face Plate.
185 Felt Washer (Front).
186 Felt Washer (Rear).
187 Felt Holder.
189 Wiper.
194 Oil Dipper.
195 Gear Retaining Spring.
196 Headstock Drive Pin.
197 "Boxford" Nameplate.
198 Pin (Main Spindle Key).
201 Gear Shifter Spring.
202 Guard Piece ("A" Model).
203 Guard Piece ("B" & "C" Models).
204 Retaining Spring.
205 Back Gear Spring.
206 Spindle Pulley Pin.
207 Back Gear Retaining Plate.
208 Back Gear Retaining Screw.
212 Special Grub Screw.
213 Change Gear 20T.
214 Change Gear 127T. } Compound.
215 Change Gear 100T. } Compound.
216 Change Gear 100T.
217 Pin.
218 Change Gear 18T.
219 Change Gear 22T.
220 Change Gear 26T.
221 Change Gear 28T.
222 Guard Plate.
223 Guard Plate Pin.
224A Gib Strip Pin.
224B Gib Strip Pin.
225 Cross Feed Stud Spring.
226 Countershaft Upright.
227 Loose Bearing.
228 Retaining Washer.
229 Countershaft Spindle.
230 Main Spindle Key.
231 Stud Gear Spindle Key.
232 Lead Screw Key.
233 Worm Key.
234 Worm Locknut Pin.
235 Compression Spring.
236 Compression Spring.
241 Clip for Motor Lead.
242 Pin (Back Gear Shaft).
243 Pin (Back Gear Sleeve).
244 Pin (Belt Tension Screw).
245 Dowel.
247 Tailstock Offset Screw.
250 Spindle Pulley.
251 Countershaft Pulley.
252 Headstock Foot.
253 Tailstock Foot.
254 Support Spacer.
257 Belt Tensioning Bush.

258 Belt Tensioning Screw.
259 Belt Tensioning Screw Head.
264 Oil Feed Tube.
268 Change Gear 50T.
276 Rack Washer.
277 Headstock Speed Chart.
278 "Boxford Machine Tools" Nameplate
279 Screwcutting Chart (Metric "B" and "C" Models).
280 Gear Box Body (English).
280M Gear Box Body (Metric).
281 L.H. Gear Box Lever.
282 R.H. Gear Box Lever (English).
282M R.H. Gear Box Lever (Metric).
283 Gear 18T.
284 Gear 20T.
285 Gear 22T.
286 Gear 23T.
287 Gear 24T.
288 Gear 26T.
289 Gear 28T.
290 Gear 16T. } Compound.
291 Gear 32T. }
292 Gear 16T. } Compound.
293 Gear 32T. }
294 Gear 16T. } Compound.
295 Gear 32T. }
296 Gear 16T. } Compound.
297 Gear 32T. }
298 Gear 16T.
299 Gear 16T.
300 Lever Gear 20T.
301 Collar.
302 Intermediate Shaft.
303 Gear Lever Shaft.
304 Input Shaft.
305 Lead Screw Gear.
307 Pin (Gear Box).
308 Knob (Gear Box).
309 Plunger (Gear Box).
311 Key (Imput Shaft).
312 Key (Inter Shaft).
313 Guide Plate (English).
314 Pin (Guide Plate).
315 Lever Gear 32T.
316 Bush.
318 Lever Bush.
319 Lead Screw Key.
320 Needle Bearing.
322 Oil Pad (Imput Shaft).
323 Oil Pad (Inter Shaft).
324 Shaft Retaining Pin.
325 Pin (Lever Bush).
326 Lead Screw Collar.
327 Plug.
328 Gearbox Chart (Metric).
329 Change Gear Guard.
330 Countershaft Guard.
331 Pin (Countershaft Guard).
332 Spacing Bush.
333 Spacing Bush.
390 Tailstock Clamp Eccentric.
391 Tailstock Clamp Pin.
392 Tailstock Clamp Handle.
393 Apron Lever Pin.
394 Foot Adjusting Screw.
395 Washer.
396 Gib Strip Slug.
397 Clamp (Tailstock Spindle).
398 Clamp (Tailstock Spindle).
399 Belt Tension Handle.
400 Switch Bracket.
401 Tailstock Stop Pin.
402 Reverse Gear Bracket.
403 Plunger.
404 Finger.
405 Handle.
406 Knob.
407 Pivot Pin.
408 Spring.
409 Retaining Piece.
410 Motor.
411A V-Belt A.33.
411B V-Belt A.34.
411C V-Belt A.35.
412A V-Belt A.36.
412B V-Belt A.39.
413 Grease Lubricator.
414 Right Angled Snap Lid Oiler.
415 Ball Journal.
416 Taper Roller Bearing (Front).
417 Taper Roller Bearing (Rear).
418 Bush.
480 Countershaft Base.
481 Countershaft Bracket.
482 Countershaft Upright.
483 Loose Bracket.
484 Bracket.
485 Motor Platform.
486 Countershaft Pivot.
487 Eye Bolt.
488 Eye Bolt Stud.
489 Motor Adjustment Nut.
490 Motor Pivot Pin.
491 Belt Adjustment Screw.
492 Nut.
493 Shifter.
494 Eccentric.
495 Collar.
496 Handle Bush.
497 Handle.
498 Stop Pin.
499 Compression Spring.
500 Countershaft Guard.
501 Spacing Bush.
502 Latch.
503 Retaining Screw.
504 Guard Stop Bar.
505 Guard Stop Pin.
506 Countershaft Guard (Standard).
507 Countershaft Guard (Switch Brt.).
551 Foot.
552 Countershaft (C.S.B.).
553 Pivot Bracket.
554 Tension Bracket.
555 R.H. Eye Bolt.
556 L.H. Eye Bolt.
557 Tension Nut.
558 Retaining Screw.
559 Pivot Screw.
560 Pin.
562 Spindle.

563 Washer.
564 Switch Box.
565 "For-Rev" Escutcheon.
566 "On-Off" Escutcheon.
567 Handwheel (C.S.B.).
568 Foot Packing Piece (C.S.B.).
569 8″ Pulley (C.S.B.).
570 2″ Pulley (C.S.B.).
571 4½″ Handwheel.
572 Guard Spacing Piece (2″).
573 Countershaft Guard (C.S.B.).
574 Hinge Block.
575 Washer.
576 Countershaft V-Pulley.
577 Pin.
578 "T-Slot" Cross Slide.
579 Anchor Bracket.
580 Countershaft.
581 Countershaft Base.
582 Motor Platform.
583 Countershaft Guard.
584 Guard Spacing Piece (1″).
585 Tool Post Body.
586 Clamping Stud.
587 Handle.
588 Grip Handle.
601A Foot (Headstock).
601B Foot (Tailstock).
602 Spindle Pulley.
602TUD Spindle Pulley (Training Lathe).
603 Hardboard Cover.
604 Speed Chart.
605 Handle.
606 Handle Boss.
607 Support Plate.
608 Release Shaft.
609 Collar.
610 Angle Bracket.
611 Stop Pin.
612 Eccentric.
613 Pivot Bush.
614 Shifter.
615 Tie Rod.
616 Eye Bolt.
617 Screw Pin.
618 Large Bush.
619 Intermediate Shaft.
620 Collar (1″).
621 Intermediate Pulley.
622 Small Bush.
623 Pivot Bracket.
624 Pivot Screw.
625 Motor Platform.
626 Countershaft Pulley.
627 Countershaft Spindle.
628 Pulley Key.
629 Washer.
630 Locking Collar.
631 6″ Pulley (State Bore Size).
632 Key.
633 3″ Pulley.
634 Motor Key.
635 Guard Flap.
636 Guard Hinge.
637 Guard.
638 Guard Extra.
639 Guard (TUD).
640 Cabinet (36″, 42″, 48″).
641 Suds Tank Lid (36″, 42″, 48″).
642 Cover Plate.
643 2½″ Pulley.
644 Cabinet Lubrication Chart.
646 Motor Fixing Nut.
647 Countershaft Spindle.
648 Rack (Gap Pieces).
649 Gap Piece.
650 Gap Bed.
651 Headstock (Mk II).
652 Guard Plate.
652A Guard Plate Hinge.
653 Guard.
654 Gear Lever.
655 Back Gear Shaft.
656 Back Gear 62T.
657 Back Gear Sleeve 24T.
658 Spindle Gear 38T.
659 Spindle Pulley.
660 Drive Pin.
661 Compression Spring.
662 Retaining Piece.
663 Spindle Sliding Gear 76T.
664 Spacing Washer.
665 Main Spindle.
666 Locknut.
667 Shoe (Phos. Brz.).
667A Shoe (Hdn. Steel).
668 Gear Shifter Bar.
669 Gear Shifter Spindle.
670 Gear Shifter Boss.
671 Bush.
672 Pin (Pivot).
673 Plunger.
674 Gear Lever Spring.
675 Spindle Lock Plunger.
676 Spindle Lock Bush.
677 Spindle Lock Spring.
678 Screwed Pin.
679 Top Plate.
680 Rear Guard.
681 Headstock Nameplate.
682 Locating Bush.
683 Switch Locking Screw.
684 Switch Actuating Pin.
685 Switch Cover Plate.
686 Switch Spacing Bush.
687 Slug (Locknut).
688 Slug (Dial).
689 Spring (Dial).
690 Guard Spring.
691 Button.
692 Catch.
693 Guard Switch Bracket.
694 Terminal Box.
695 Imput Shaft.
696 Inter Shaft.
697A Inter Shaft Pinion 16/32T.
697B Inter Shaft Pinion 16/32T.
698 Outer Shaft Pinion 16/32T.
699 Collar.
700 Gear 30T.
701 Thrust Washer.

702 Key.
703 Gear 18T.
704 Output Shaft.
705 Coupling.
706 Guide Plate (Metric).
707 Metric Lead Screw (36″, 42″, 48″).
708 Change Gear 30T.
709 Change Gear 38T.
710 Change Gear 45T.
711 Compound Gear 127/135T.
712 Guard Plate Cover.
713 Quadrant Spacing Ring.
714 Housing.
715 Vertical Screw.
716 Nut.
717 Bearing Cover.
718A Trunnion Lever.
718B Trunnion Lever.
719 Strap.
720 Handwheel.
721 Remote Control Assembly.
722 Bracket.
723A Hanger (Sens. Hd.).
723B Hanger.
724 Strap (Sens. Hd.).
725 Plummer Block.
726 Shaft (Inter).
727 Rotor.
728 V/S Pulley (Spring).
729 V/S Belt (P.444).
730 Key.
731 Motor Key.
732 V/S Pulley (Manual).
733 Bush.
734 V/S Cabinet.
735 Coupling.
736 Spacing Washer.
737 Key.
738 $2\frac{1}{2}$″ Pulley (1″).
739 Trans/Rect Box.
740 Bush.
741 Mains Junction Box.
742 Junction Box Escutsheon.
743 Grip Handle.
744 Socket Shoulder Screw.
745 12mm. Bearing.
746 Light Duty Sensing Head.
747 Intermediate Shaft.
748 Tie Rod.
749 Pivot Block.
750 Eccentric.
751 Bracket.
752 Handle.
753 $2\frac{5}{8}$″ Pulley (1″).
754 $3\frac{1}{8}$″ Pulley ($\frac{5}{8}$″).
755 $5\frac{5}{8}$″ Pulley (1″).
756 $3\frac{1}{2}$″ Pulley (1″).
757 Plate } Top Mounting
758 Pillar } for Det. 721.
759 Tachometer (0–2500).
760 Headstock Casting (LOO).
761 Spindle (LOO).
762 Spindle Locknut (LOO).
763 Spacing Washer.
764 Spindle Gear 48T.
765 Spacing Collar.
766 Pulley Gear 44T.
767 Spindle Pulley.
768 Spacing Washer.
769 Sliding Gear 80T.
770 20T. Back Gear Shaft.
771 56T. Back Gear.
772 R.H. Bush.
773 L.H. Bush.
774 Gear Shifter Bar.
775 Front Cover.
776 Rear Cover.
777 Key (Screw Fixing).
777A Key (Pin Fixing × $\frac{7}{8}$″ long).
777B Key (Pin Fixing × $1\frac{1}{4}$″ long).
778 Draw Nut (Complete Assembly).
778A Outer Ring (Draw Nut).
778B Inner Ring (Draw Nut).
778C Key (Draw Nut).
779 Key (Spindle Nose).
780 Reverse Gear Bracket.
781 Reverse Gear Spindle.
782 48T. Rev. Gear Follower.
783 Pillar.
784 32T. Reverse Gear.
785 Reverse Gear Stud.
786 Washer.
787 Plunger.
788 Anchor Bracket.
789 Draw Bar Handwheel (5C).
790 Drawtube (5C).
791 Collet Adaptor (5C).
792 Pin (Collet Adaptor).
793 Nose Cap.
794 Catch Plate.
794A Balance Peg.
794B Driver Pin.
795 Face Plate ($8\frac{7}{8}$″).
796 "C" Spanner.
797 Back Shaft L.H. Bearing.
798 Back Shaft R.H. Bearing.
799 Oil Retaining Bush.
800
801 Front Taper Roller Bearing.
802 Rear Taper Roller Bearing.
803 Adaptor Sleeve (No. 3 Morse).
804 No. 3 Morse Centre.
805 Splash Guard (Headstock).
806 Screw (Switch Actuating).
807 Key (Spindle Gear).
808 Adaptor (Magnetic Brake).
809 Link Bracket } Lever Collet
810 Link (LOO) } Chuck.
811 Pin. } Chuck.
812 Link (Std.) } Chuck.
813 64T } Compound Gear.
814 54T } Compound Gear.
815 76T } Compound Gear.
816 65T } Compound Gear.
817 Disc Spring (Z8).
818 $\frac{3}{8}$″ Ball Journal (Double Shield).
819 $\frac{1}{2}$″ Ball Journal (Double Shield).

See note on page 20 for ordering spares or replacement parts, etc.

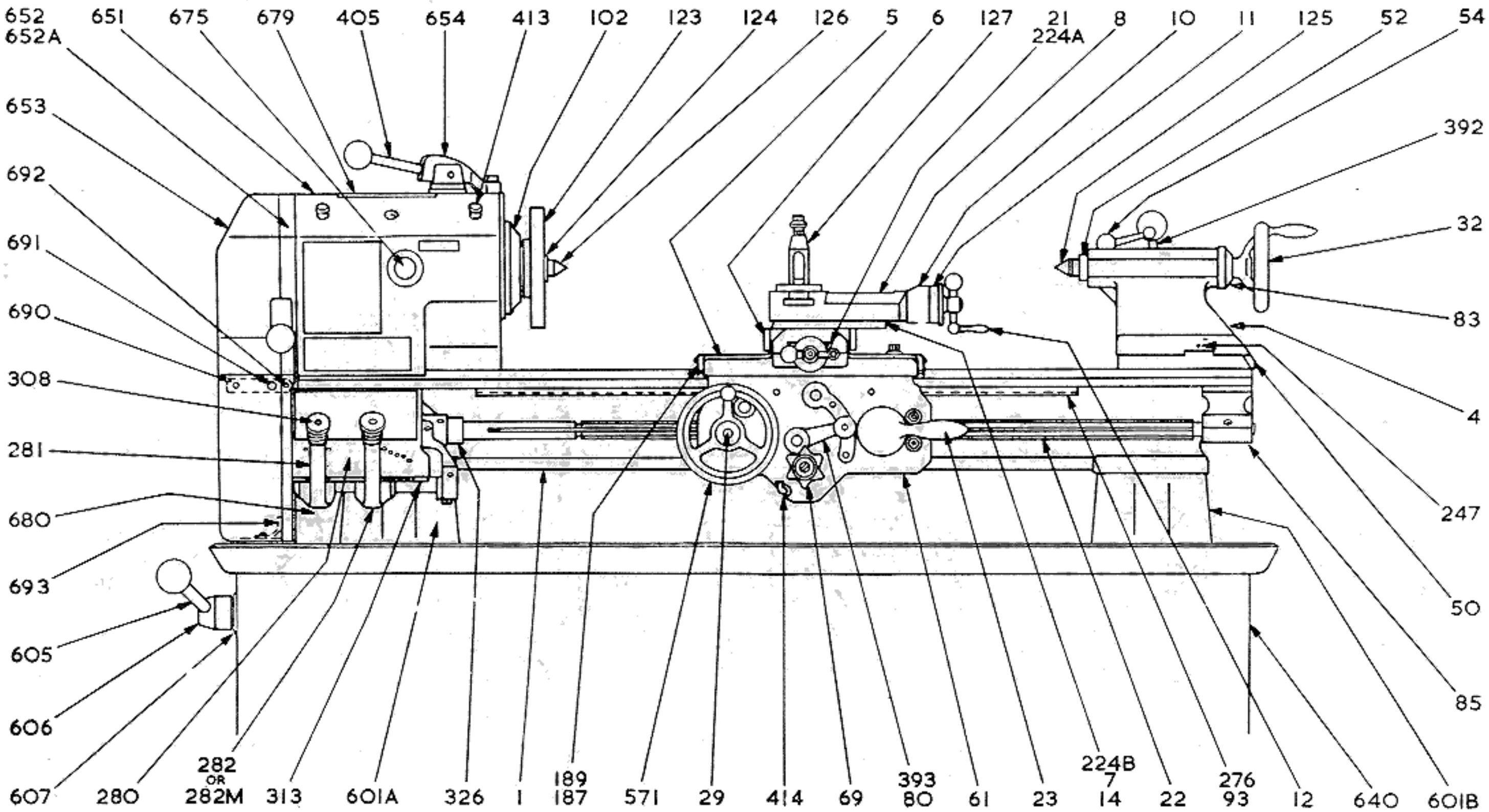

Diagram Z. General Arrangement Mk. II

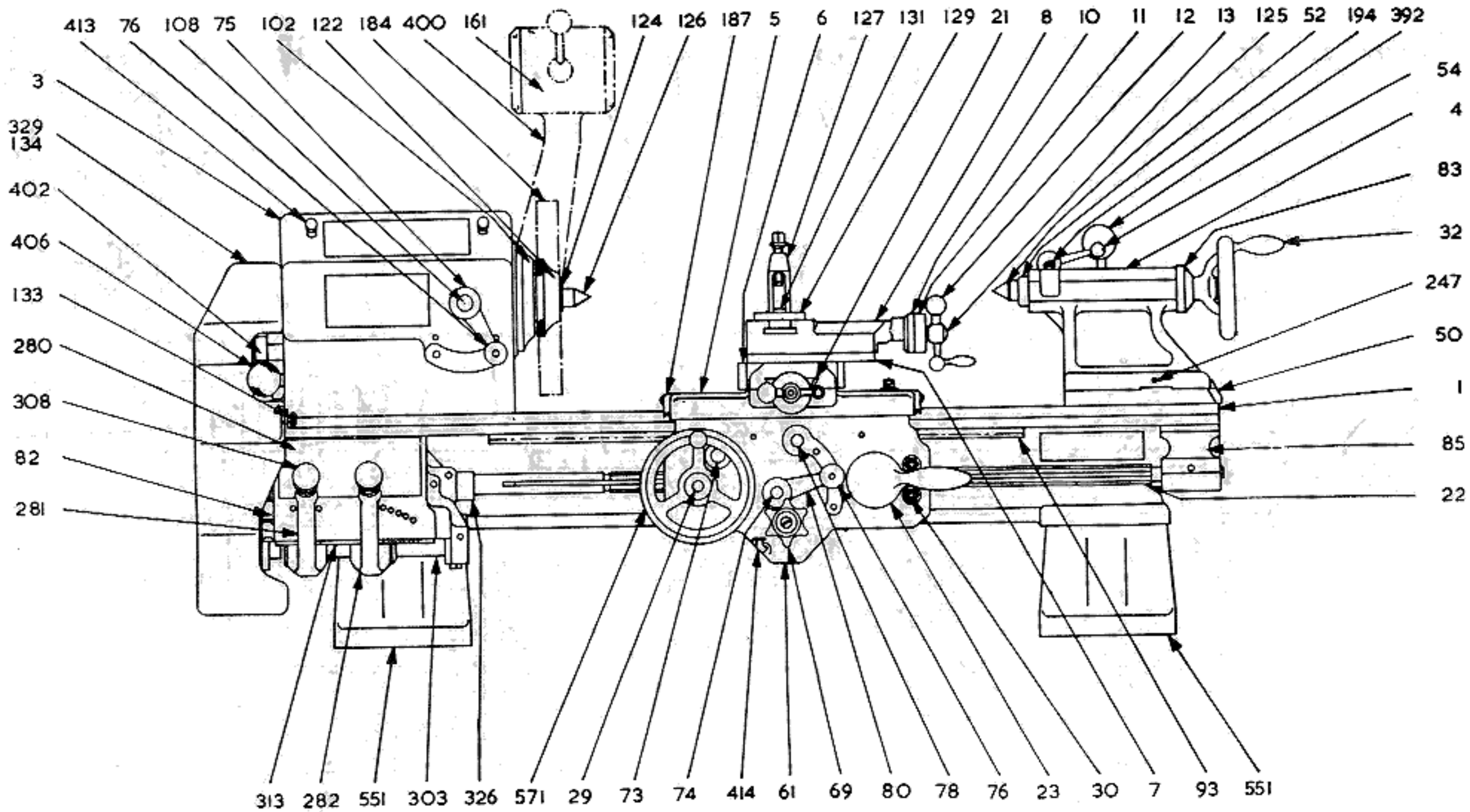

Diagram Y. General Arrangement

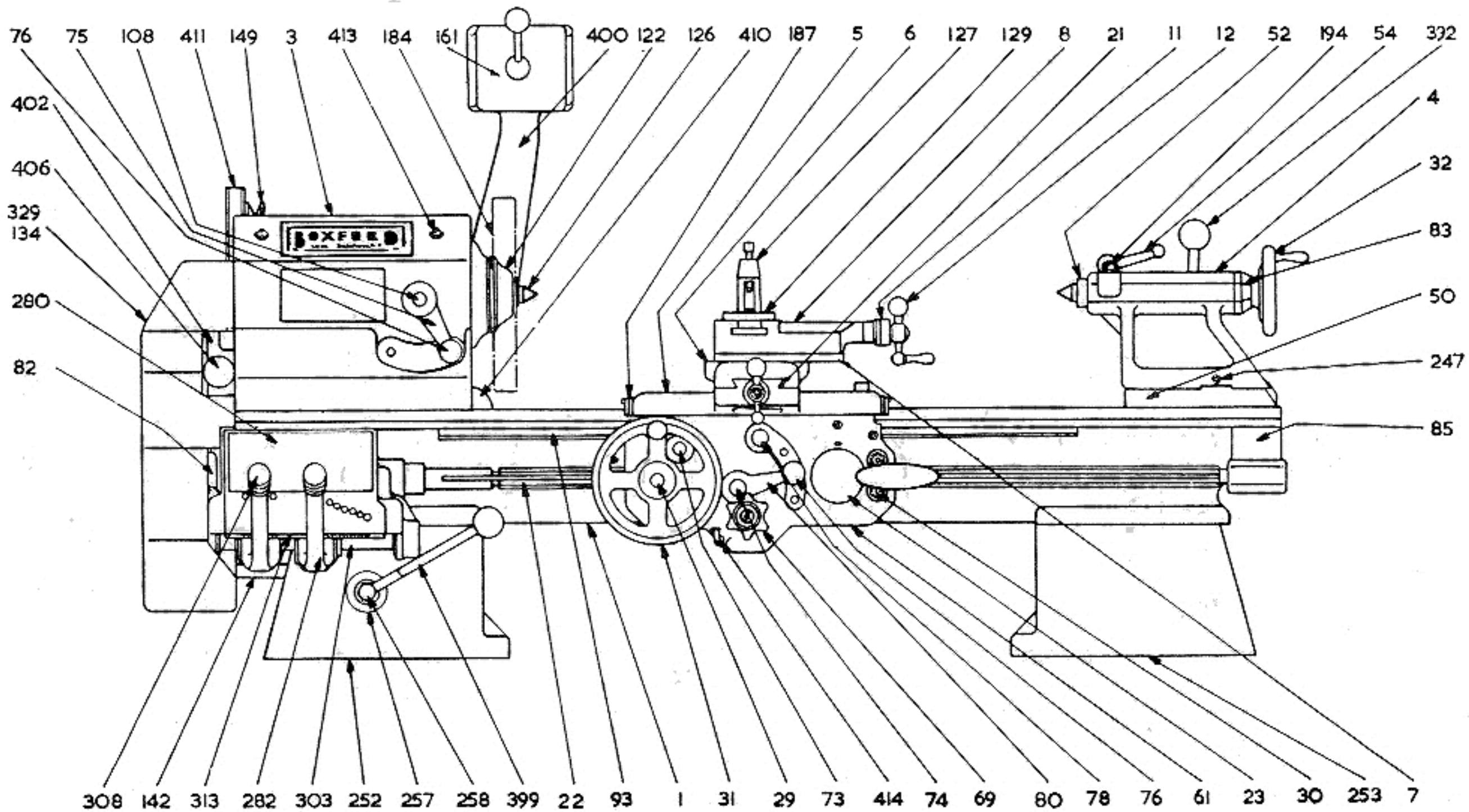

Diagram X. General Arrangement

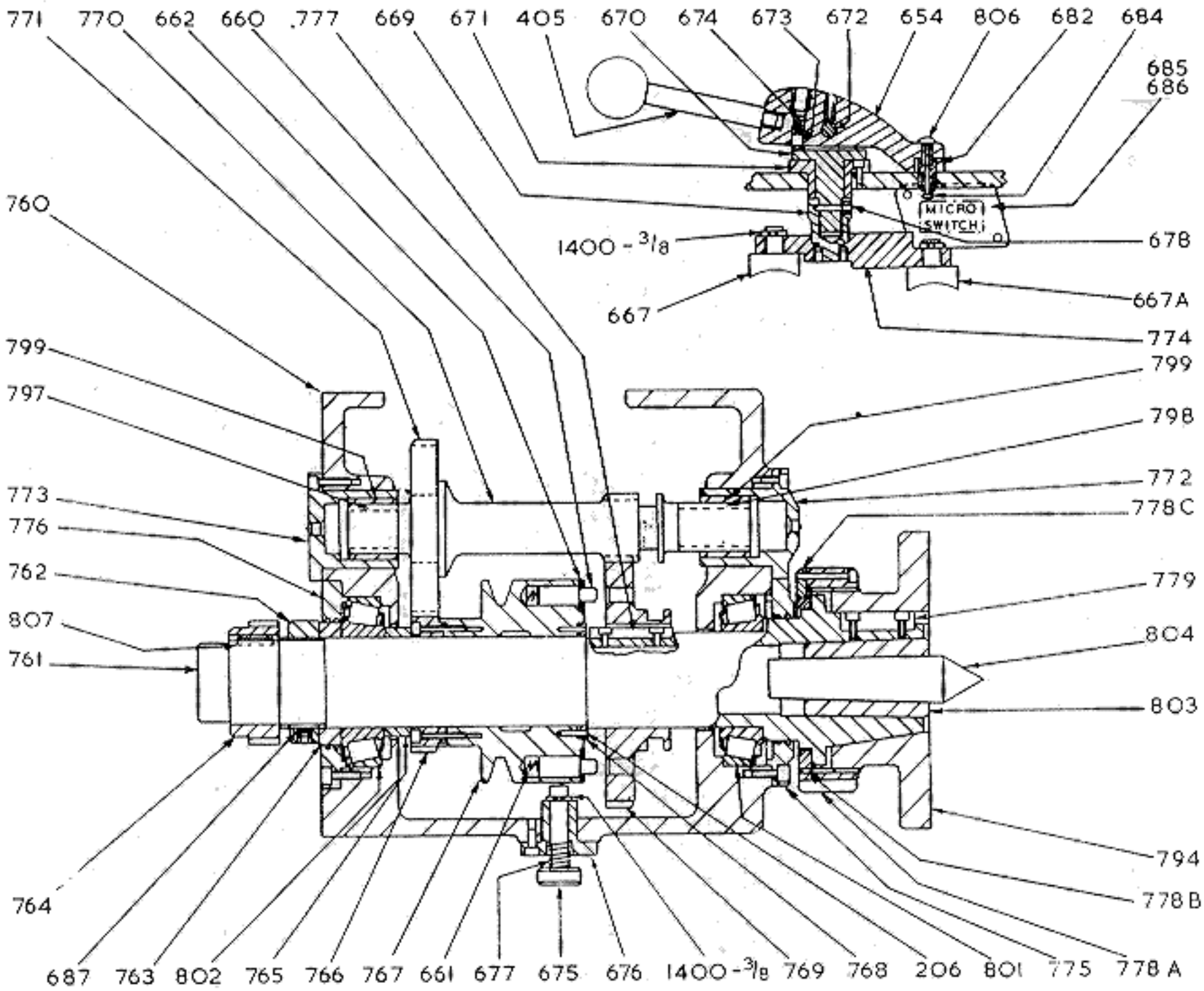

Headstock LOO

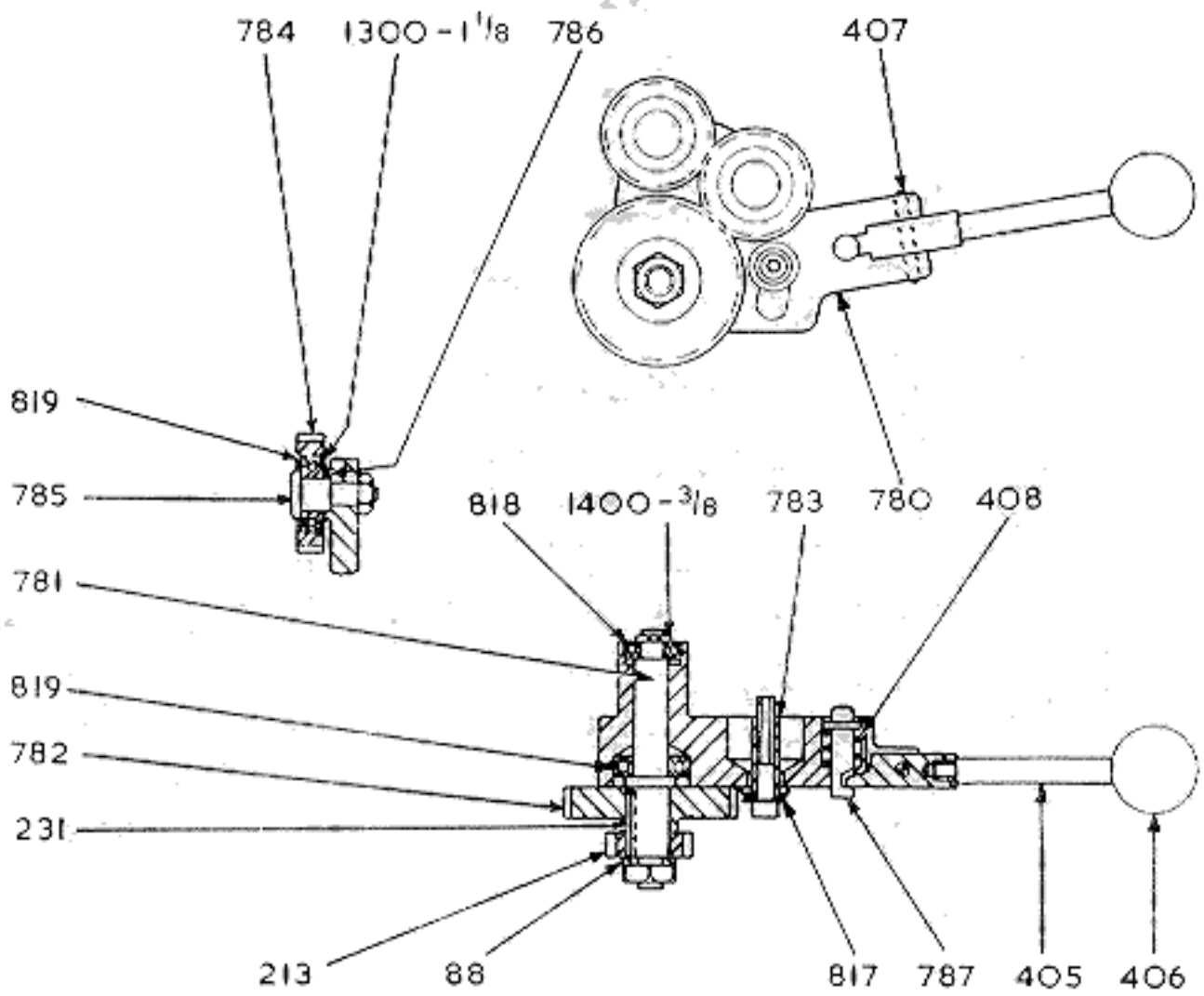

Reverse Gear LOO

NOTE:

When dismantling LOO Headstock with key (777) fixed in spindle ensure that key is in 12 o'clock position, as this will enable the key to pass the slot in the casting, thus allowing the spindle to be readily withdrawn.

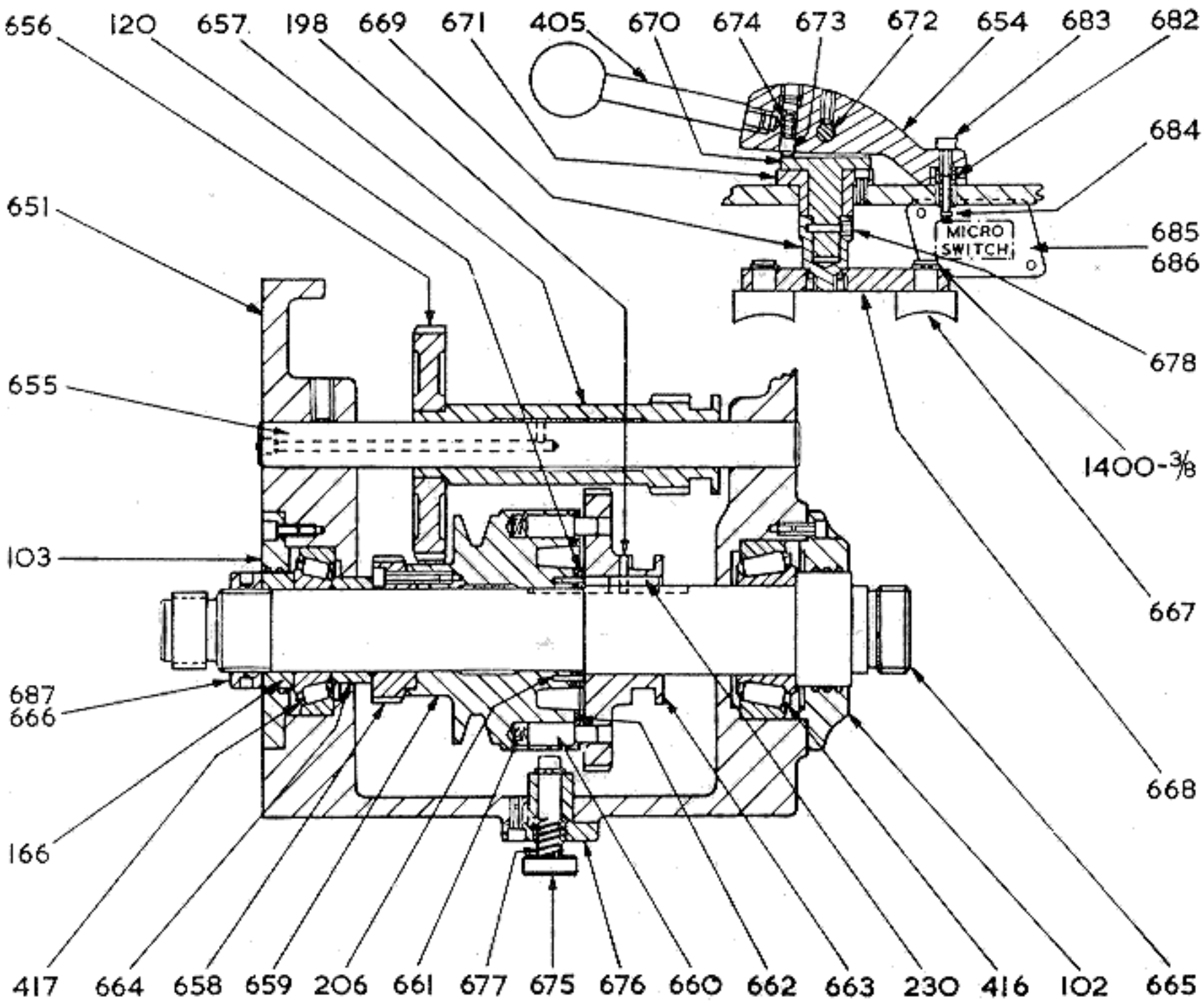

Diagram W. Headstock Mk. II

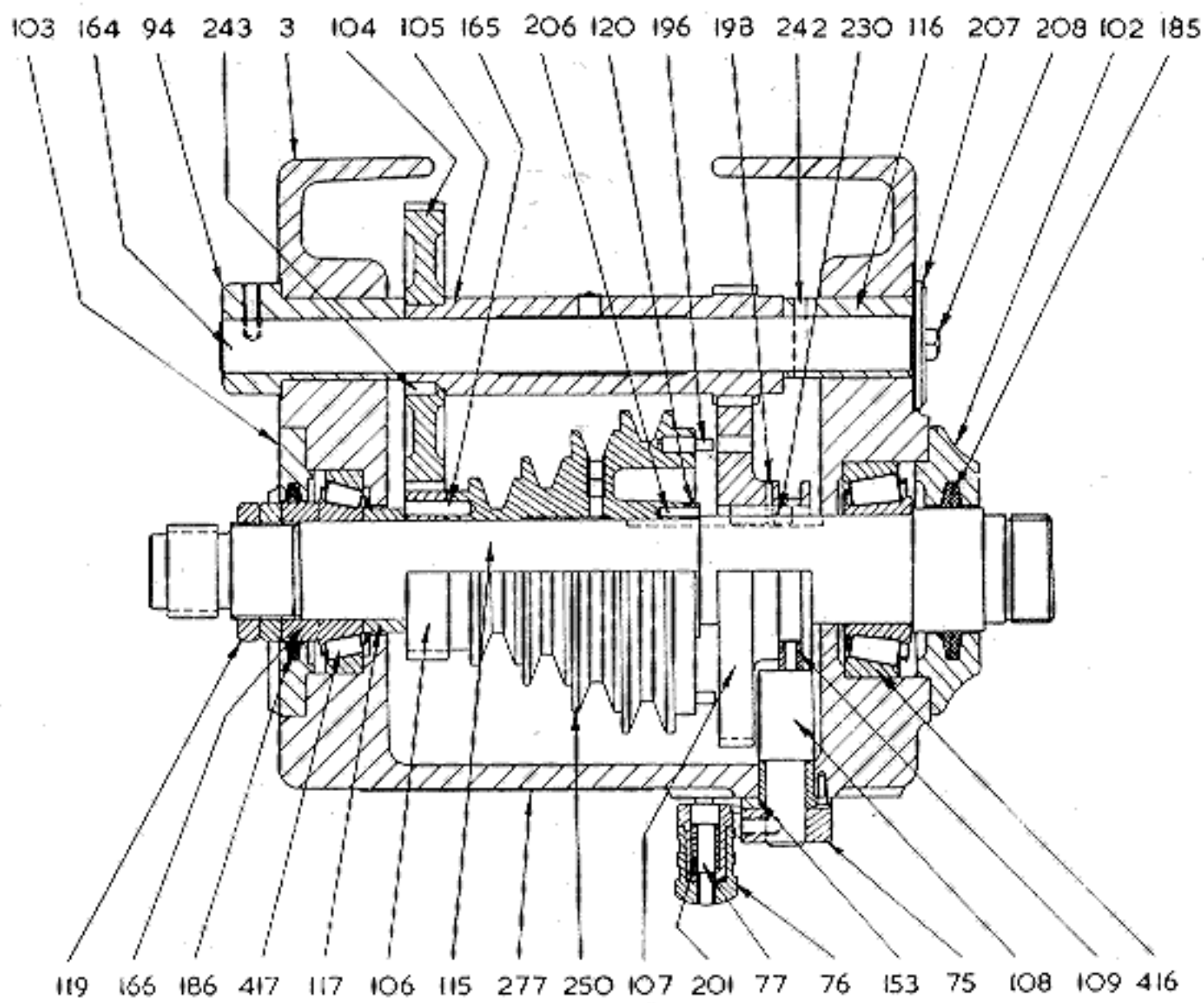

Diagram V. Headstock

NOTE: Detail 250 is replaced by 602 on Underdrive Mk. I Headstocks.

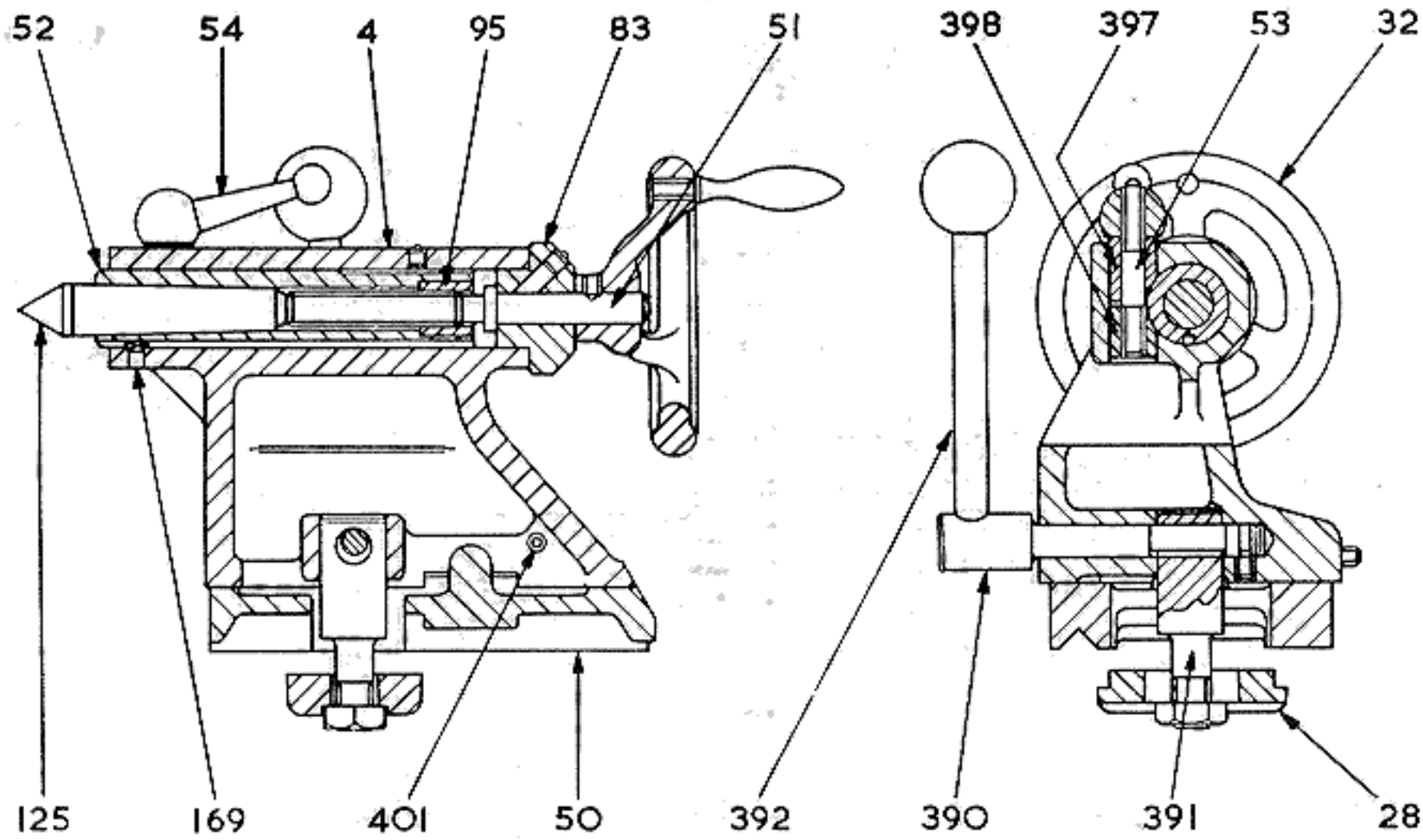

Diagram U. Tailstock

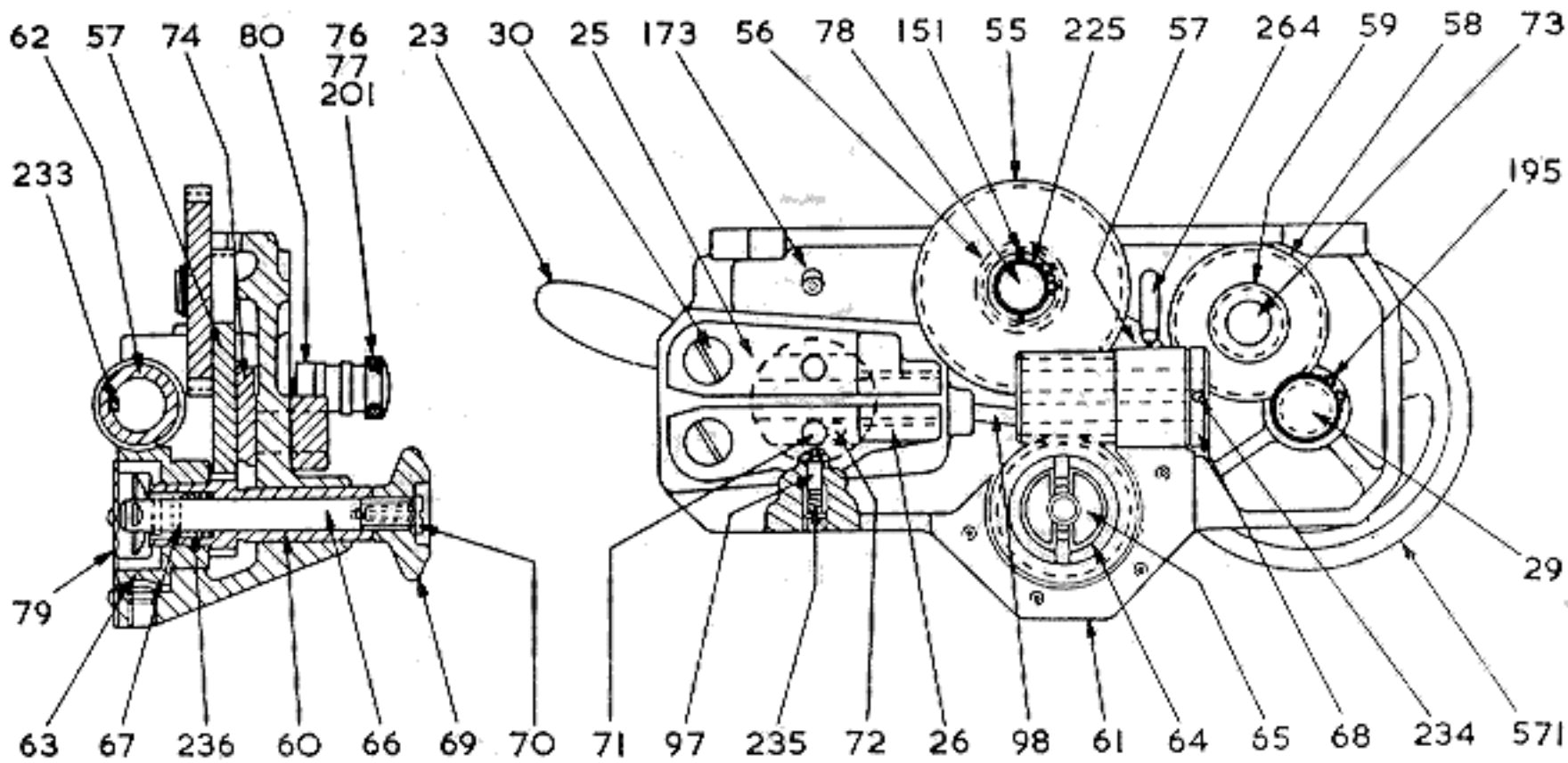

Diagram T. Automatic Apron (Models A and B)

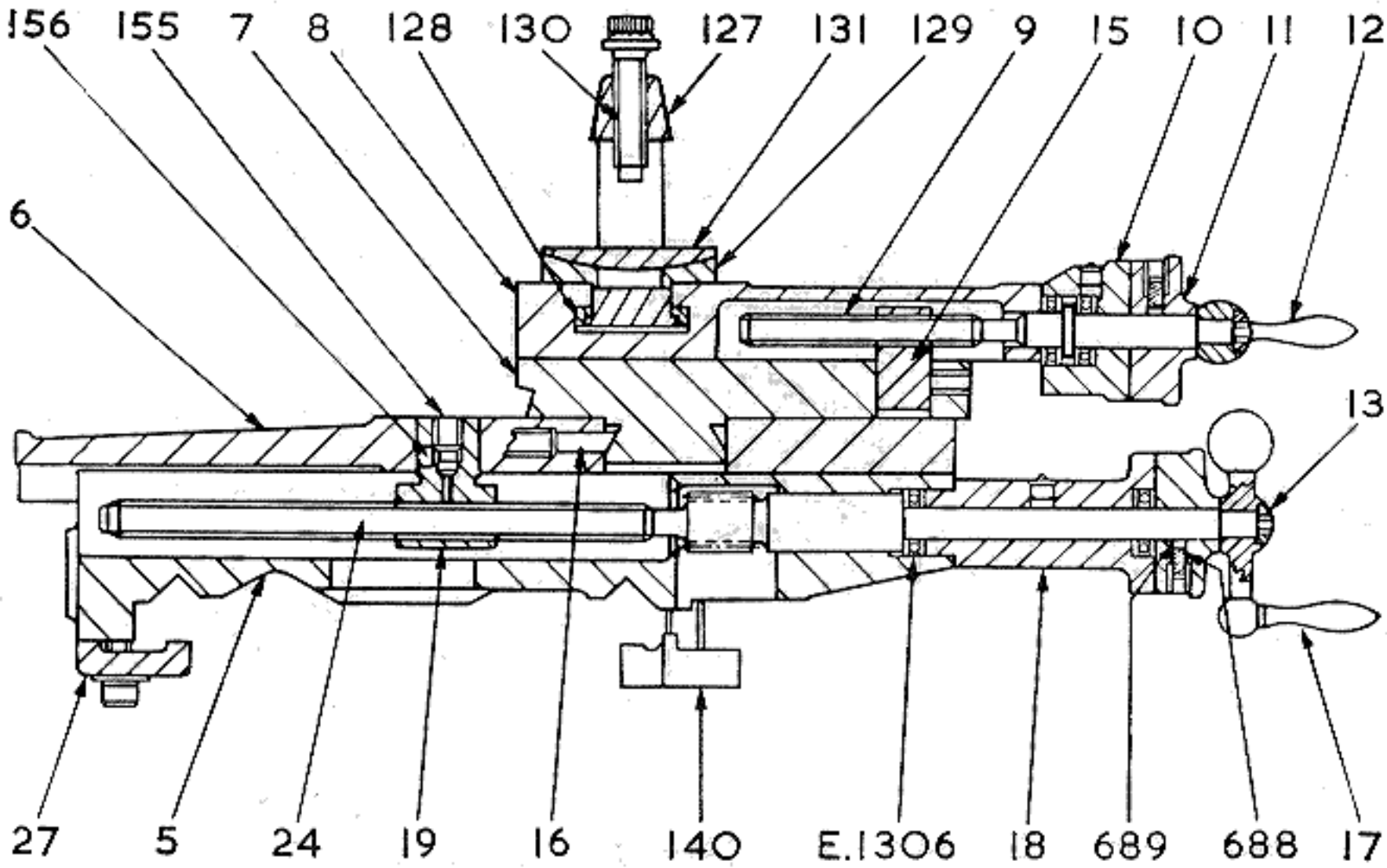

Diagram S. Saddle and Compound Rest

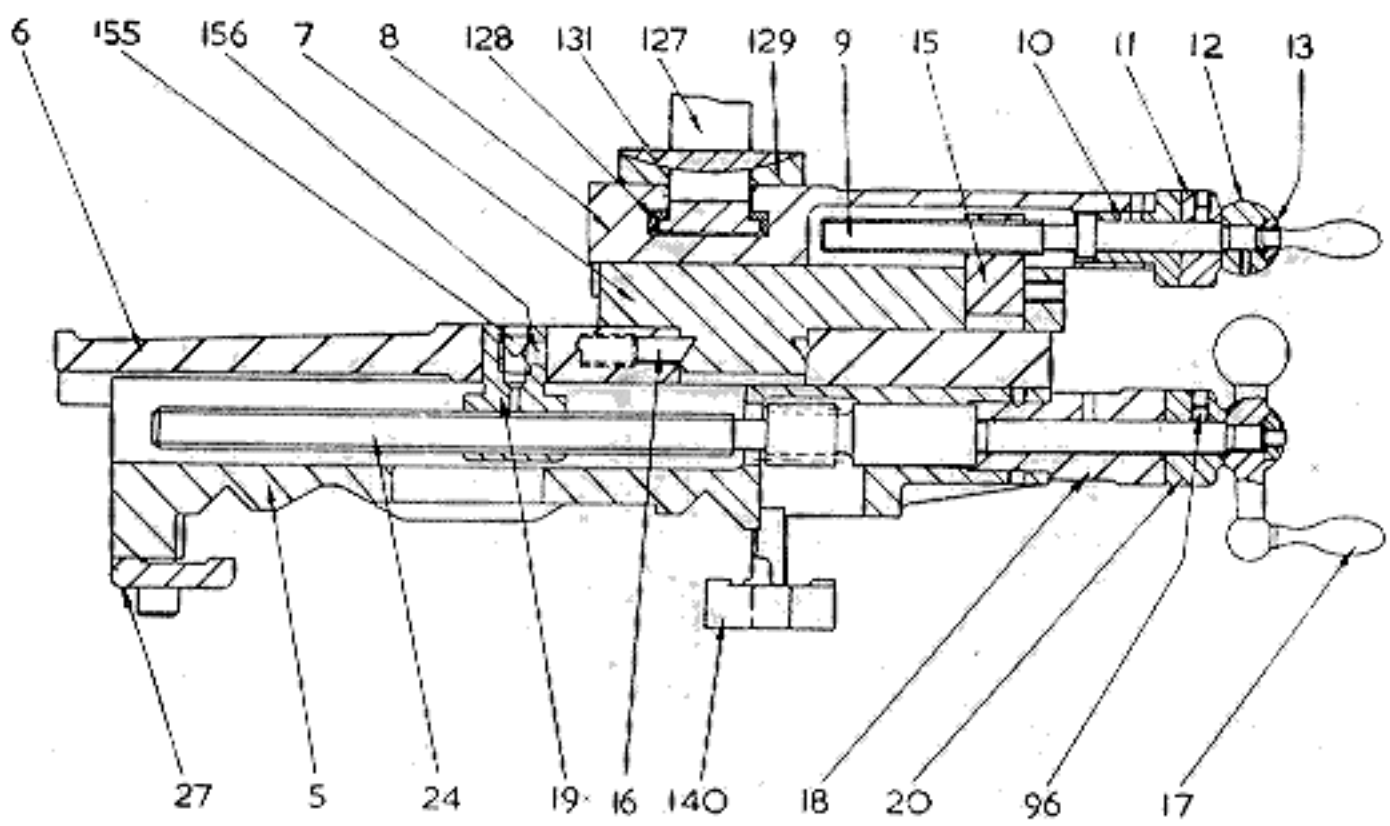

Diagram R. Saddle and Compound Rest

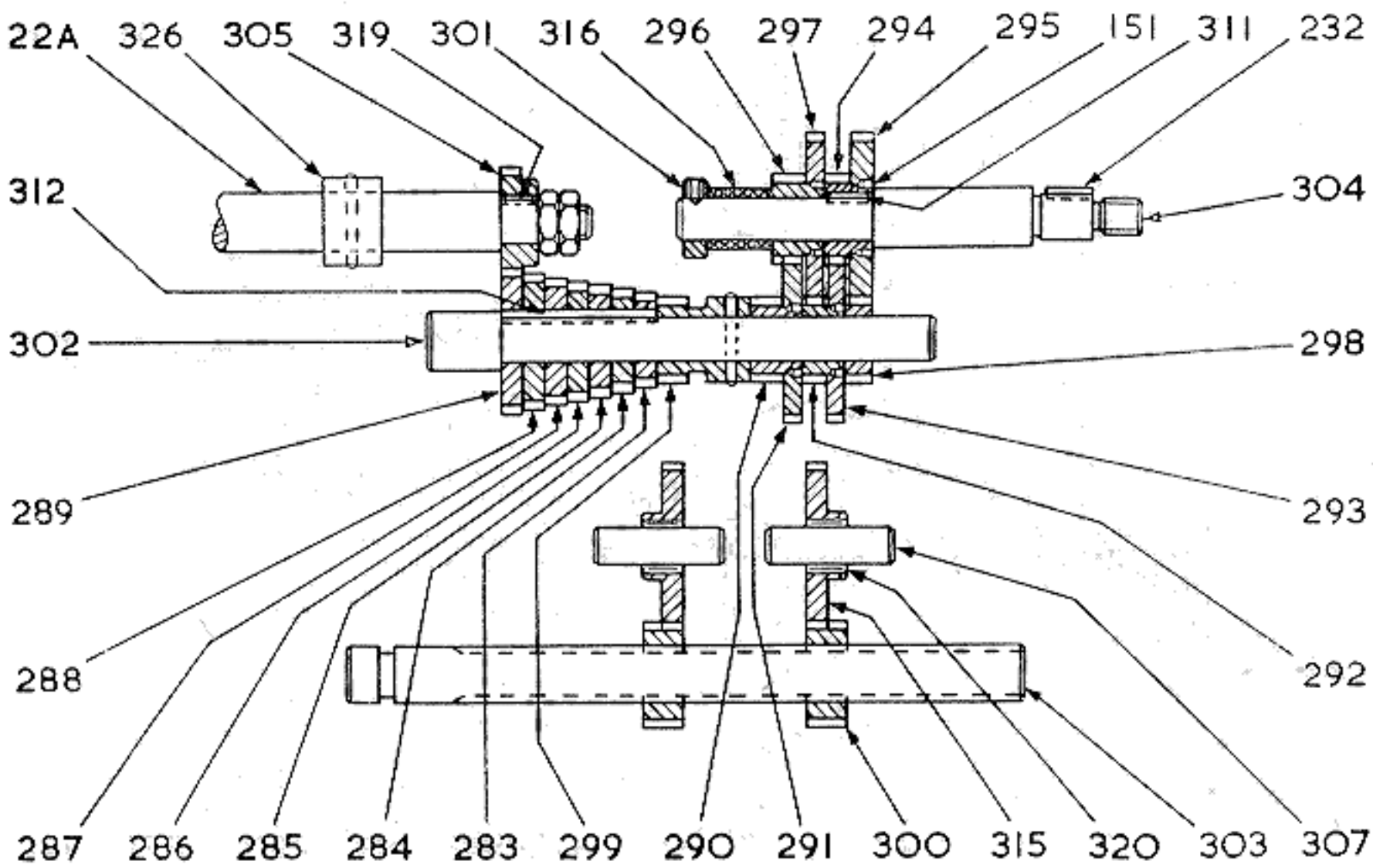

Diagram Q. Gearbox (English)

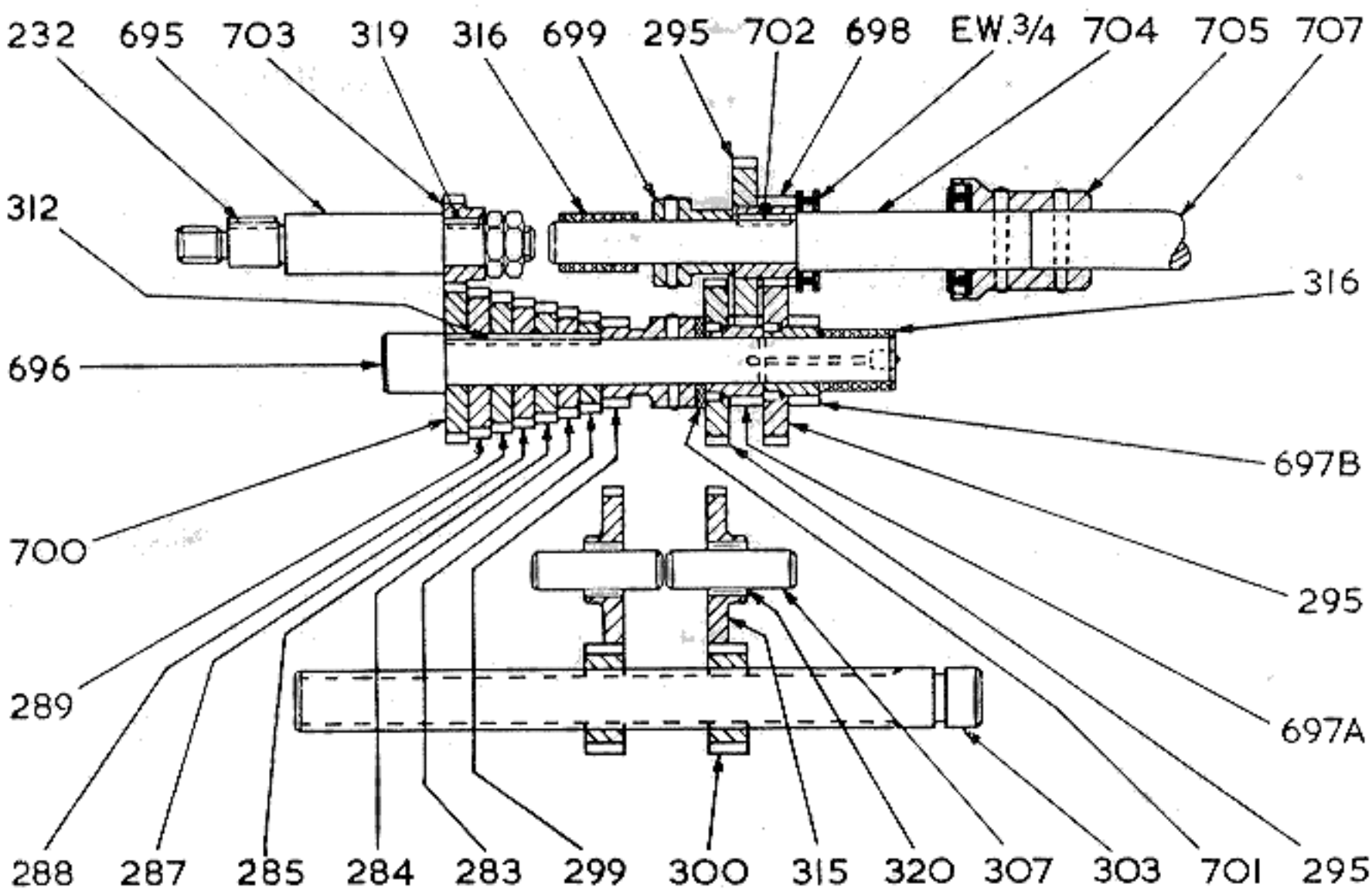

Diagram P. Gearbox (Metric)

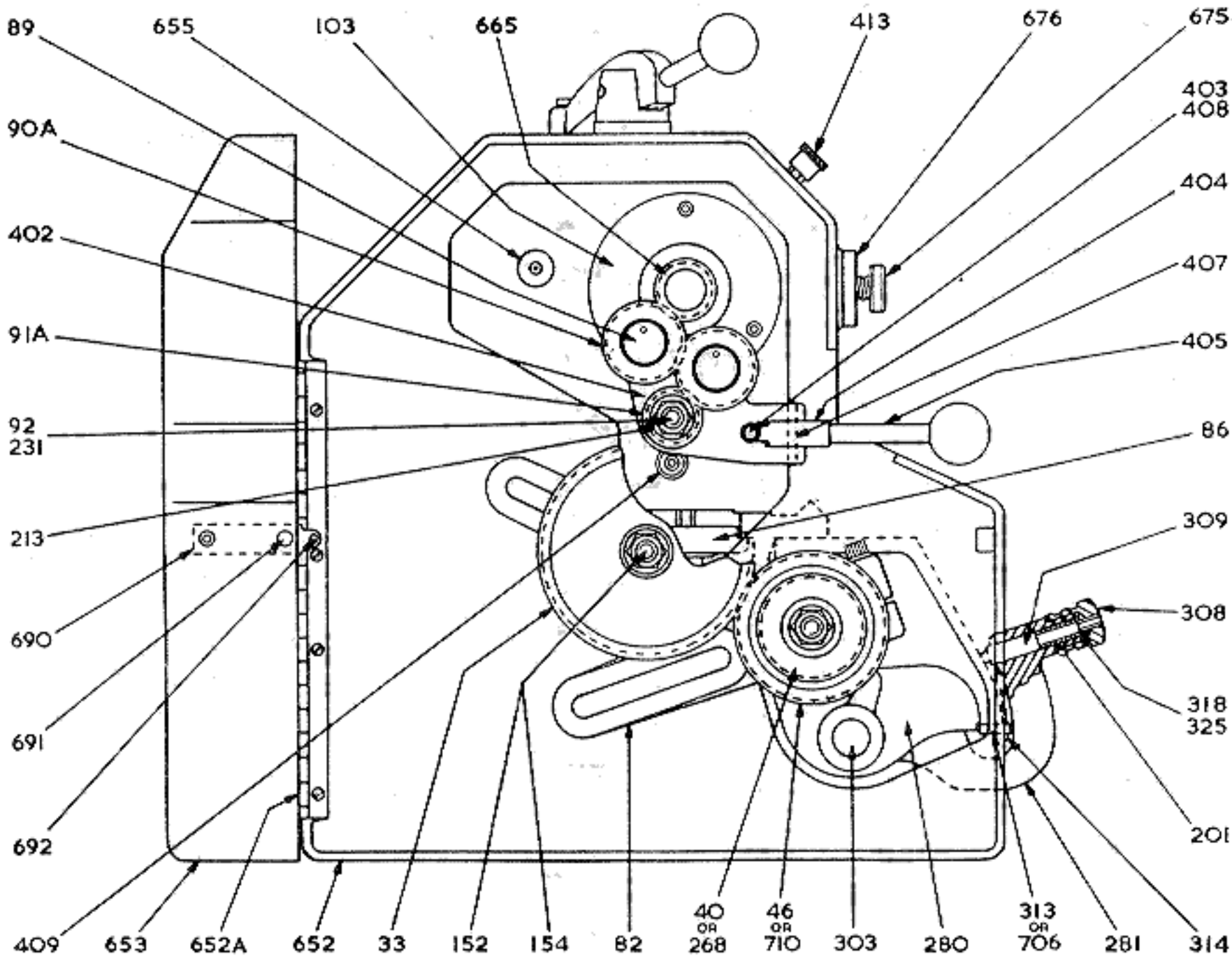

Diagram O. Gearing and Guard Mk. II

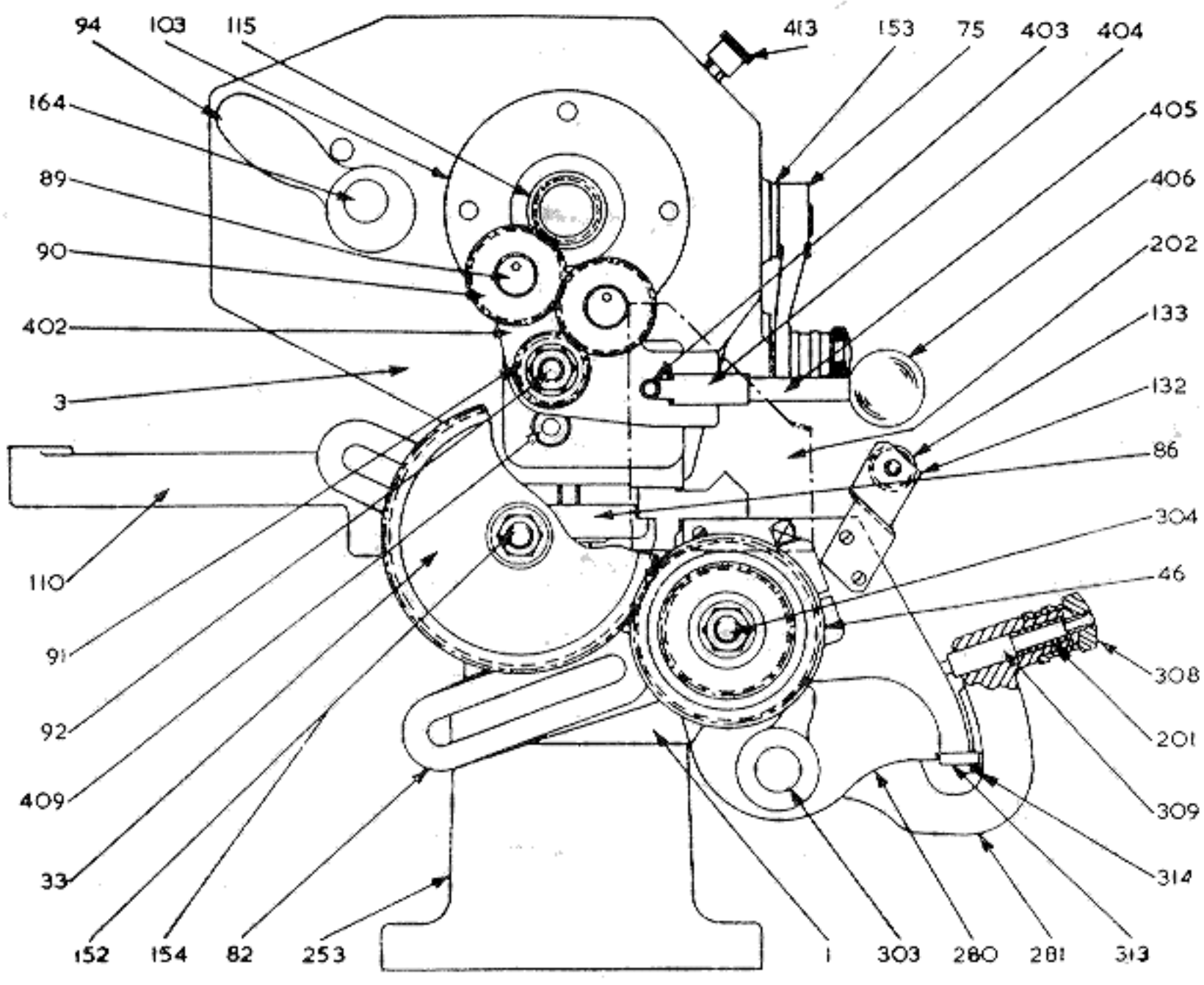

Diagram N. Gearing (Mk. I and Bench)

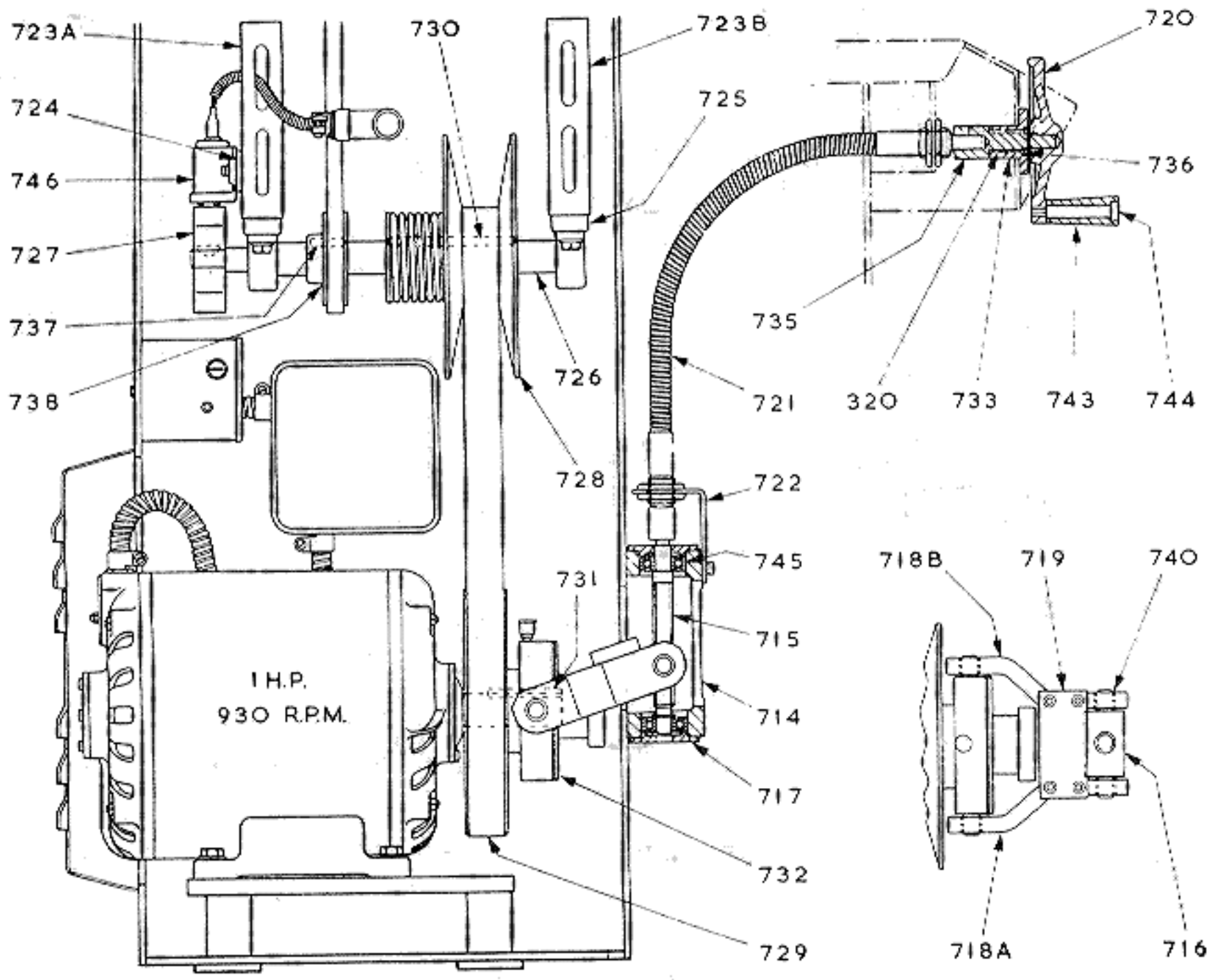

Diagram M. Vari-Speed Drive Unit

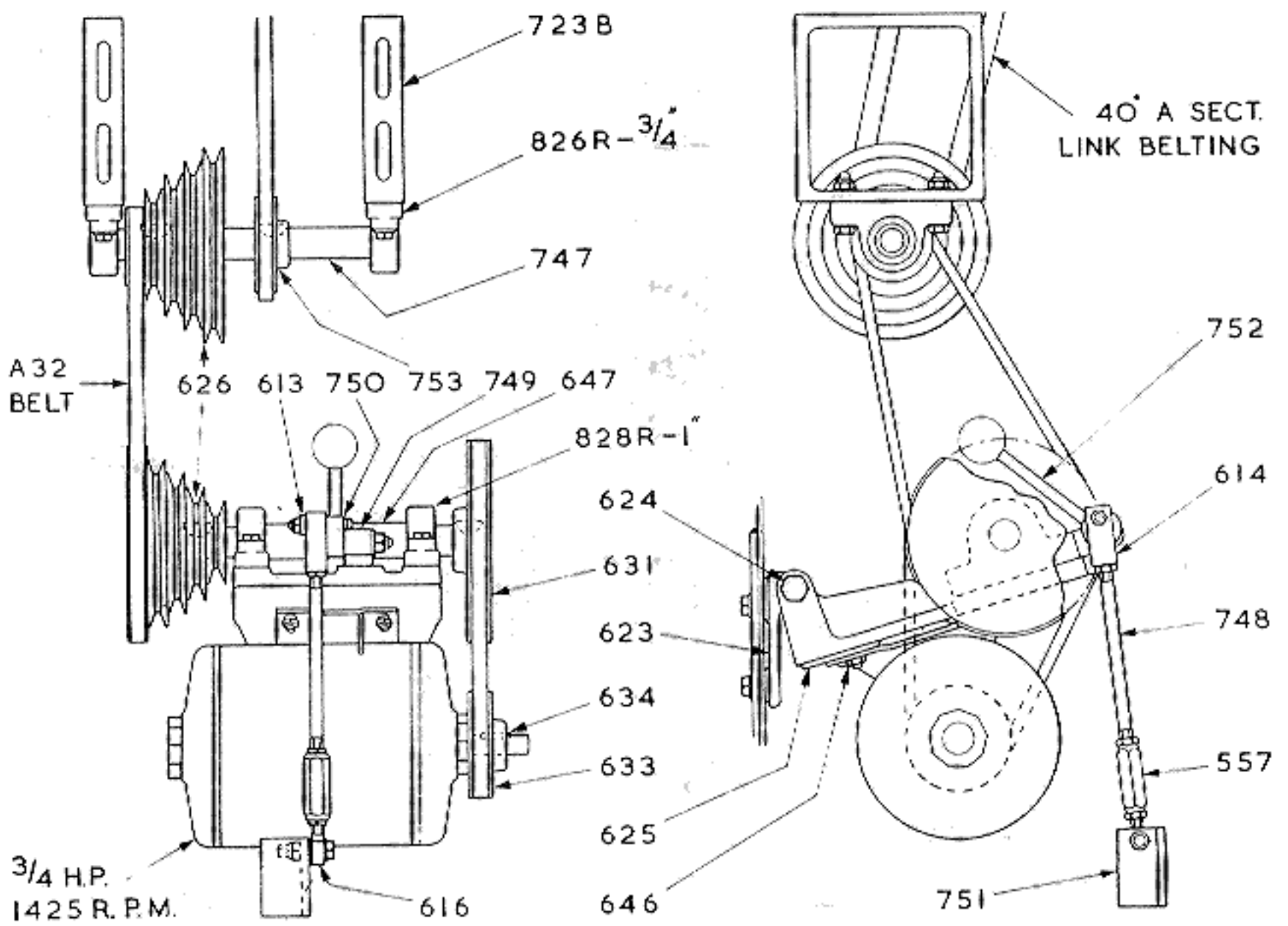

Diagram L. Standard Underneath Drive (1966 onwards)

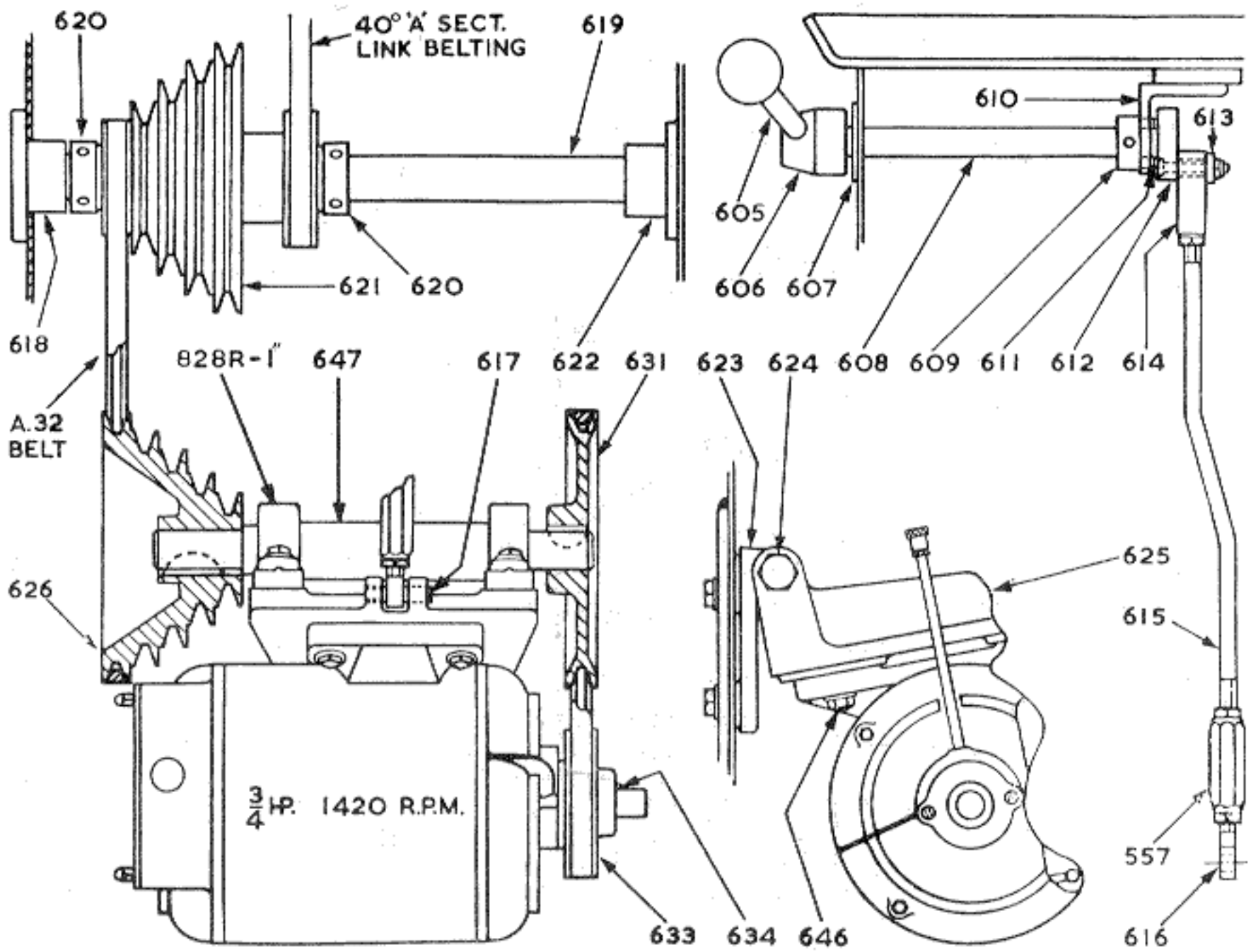

Diagram KA. Countershaft—Underdrive

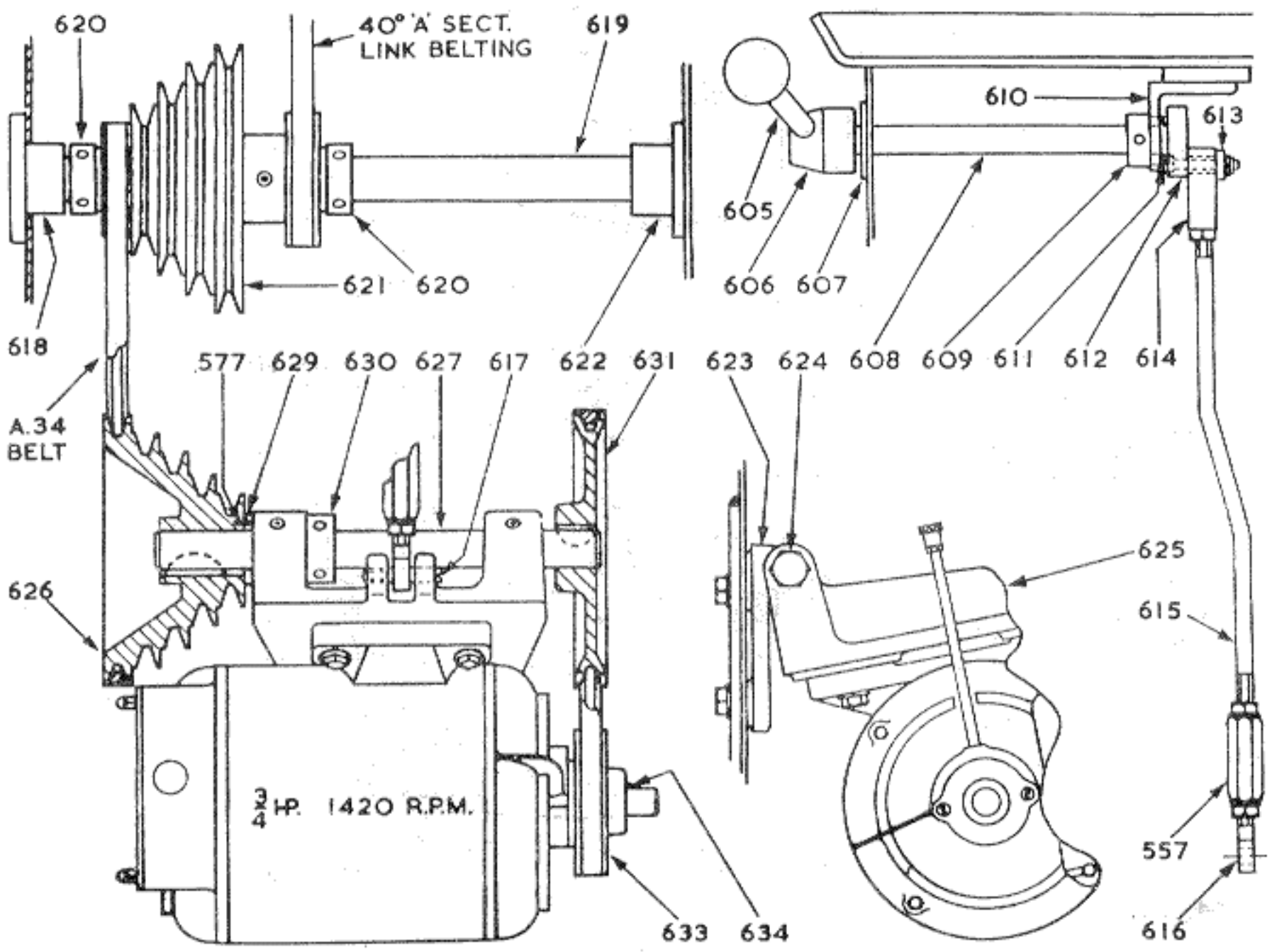

Diagram K. Countershaft—Underdrive

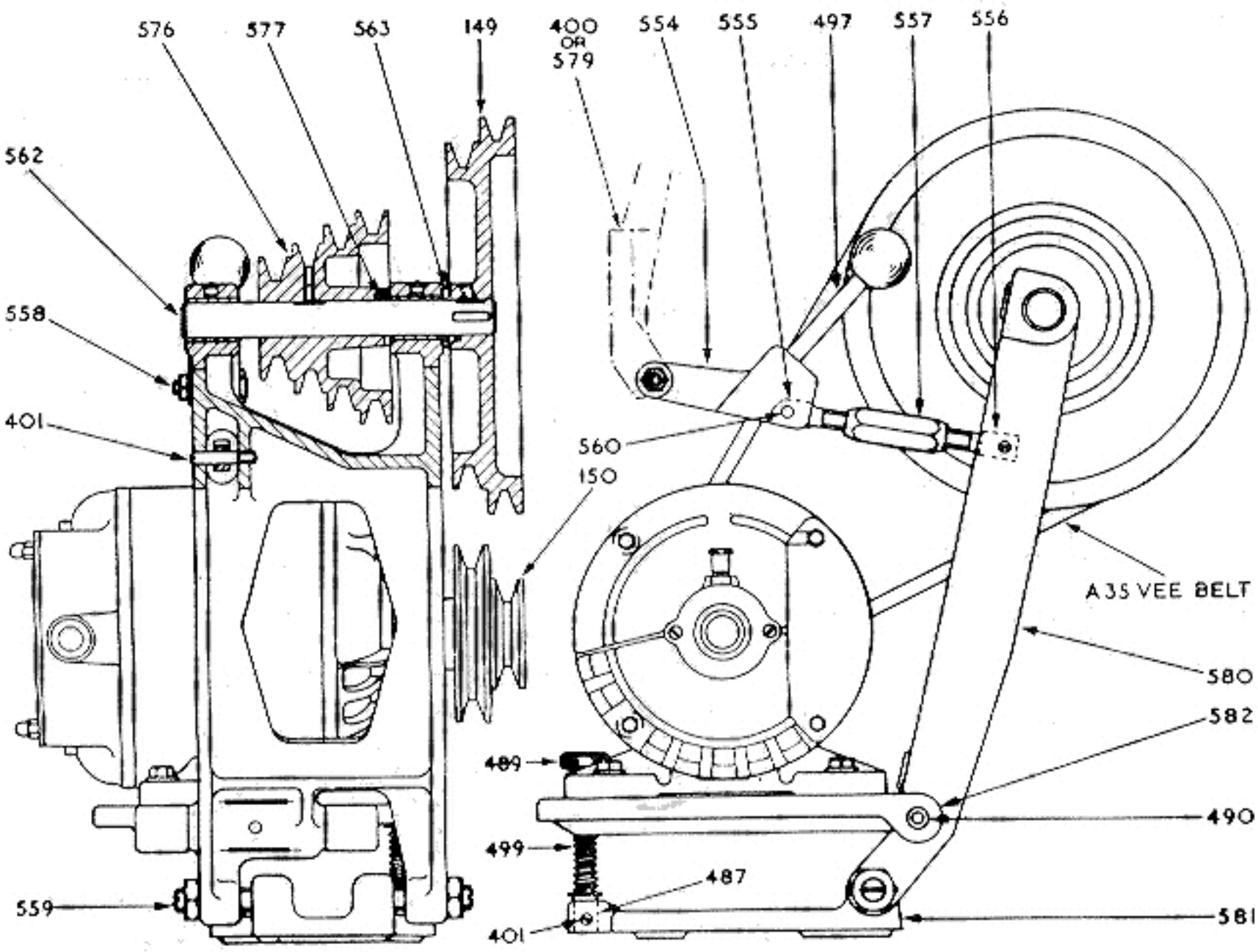

Diagram G. Countershaft (Models A, B and C)

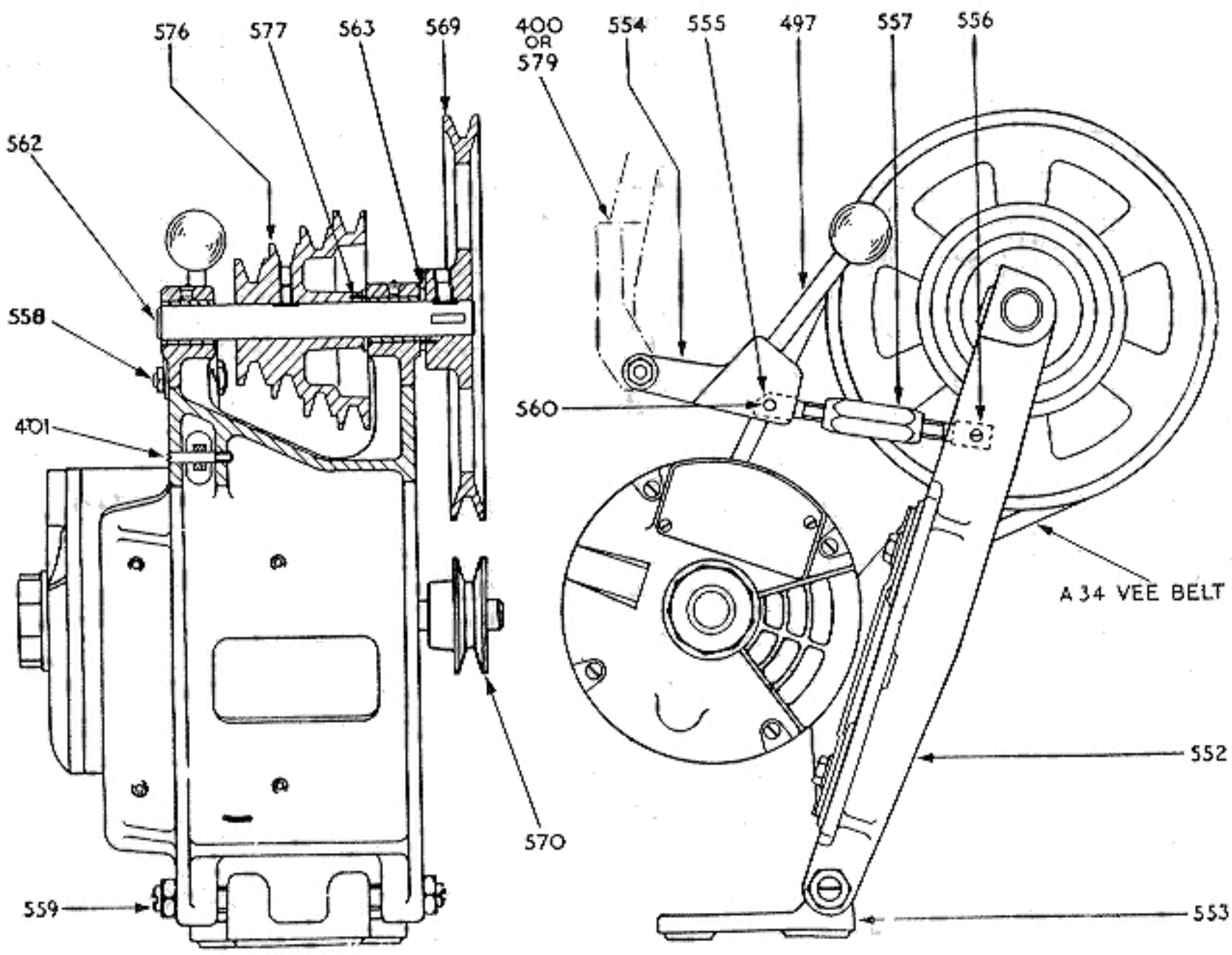

Diagram J. Countershaft—CSB

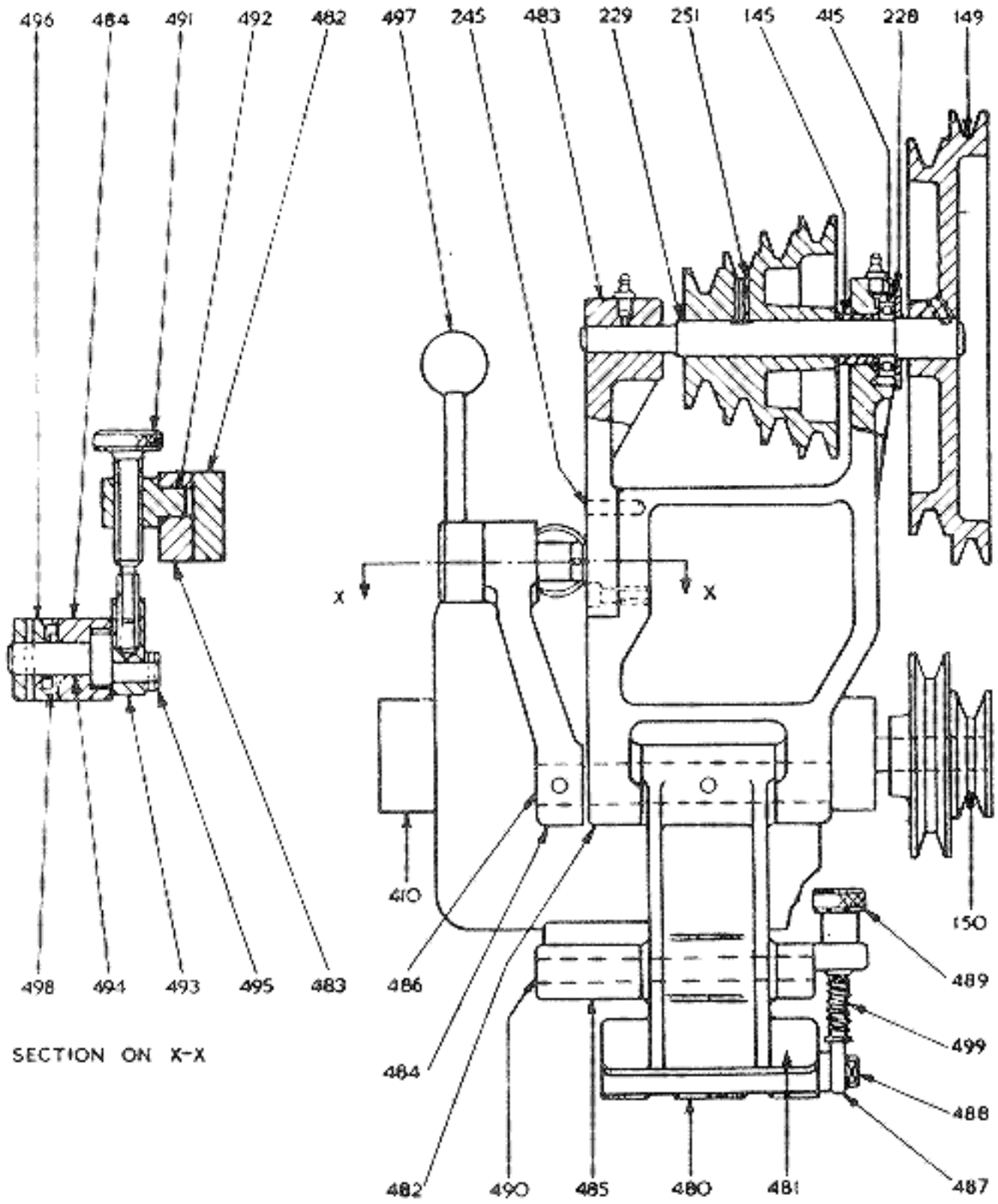

Diagram HA. Countershaft

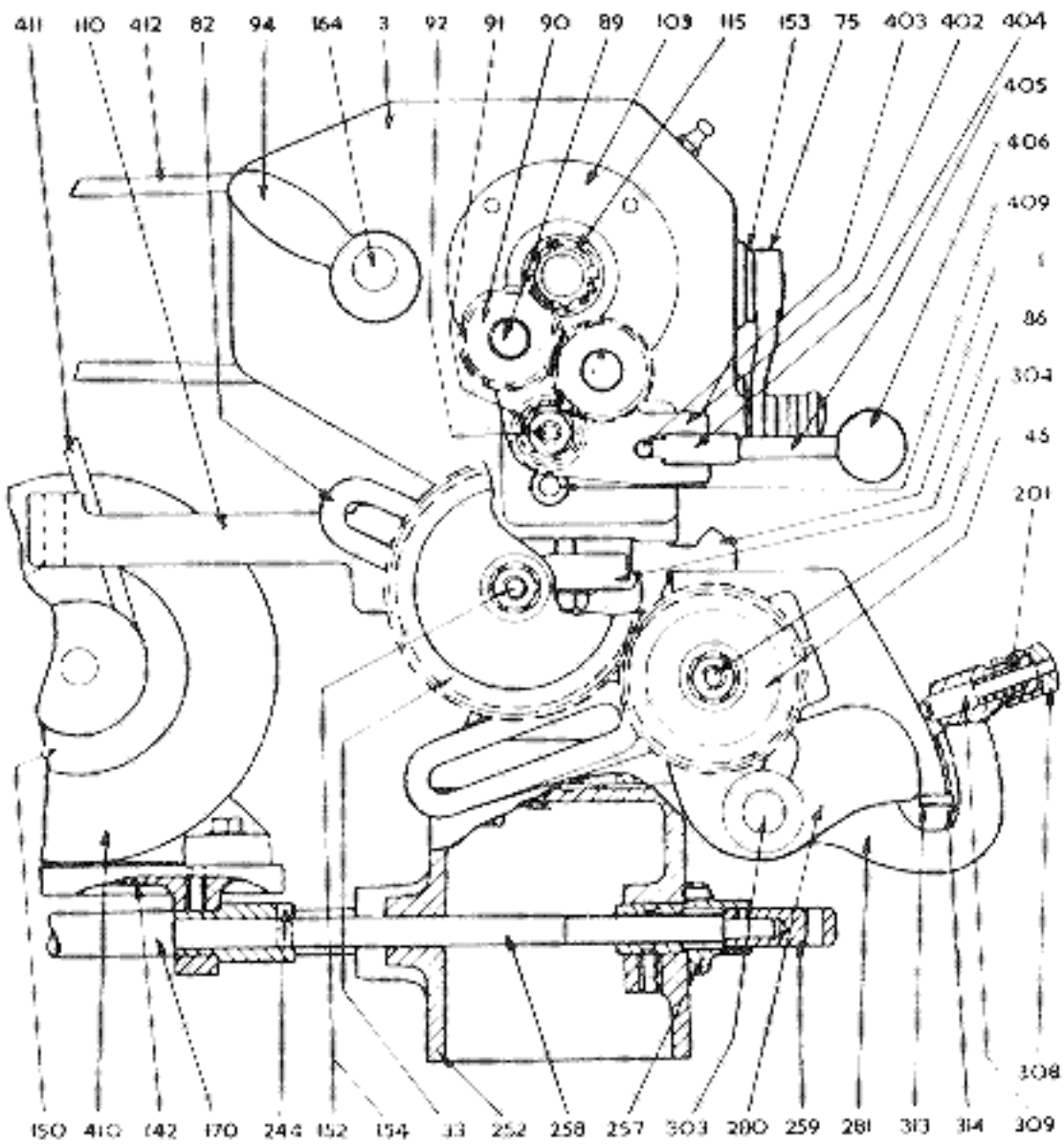

Diagram GA. Change Gears

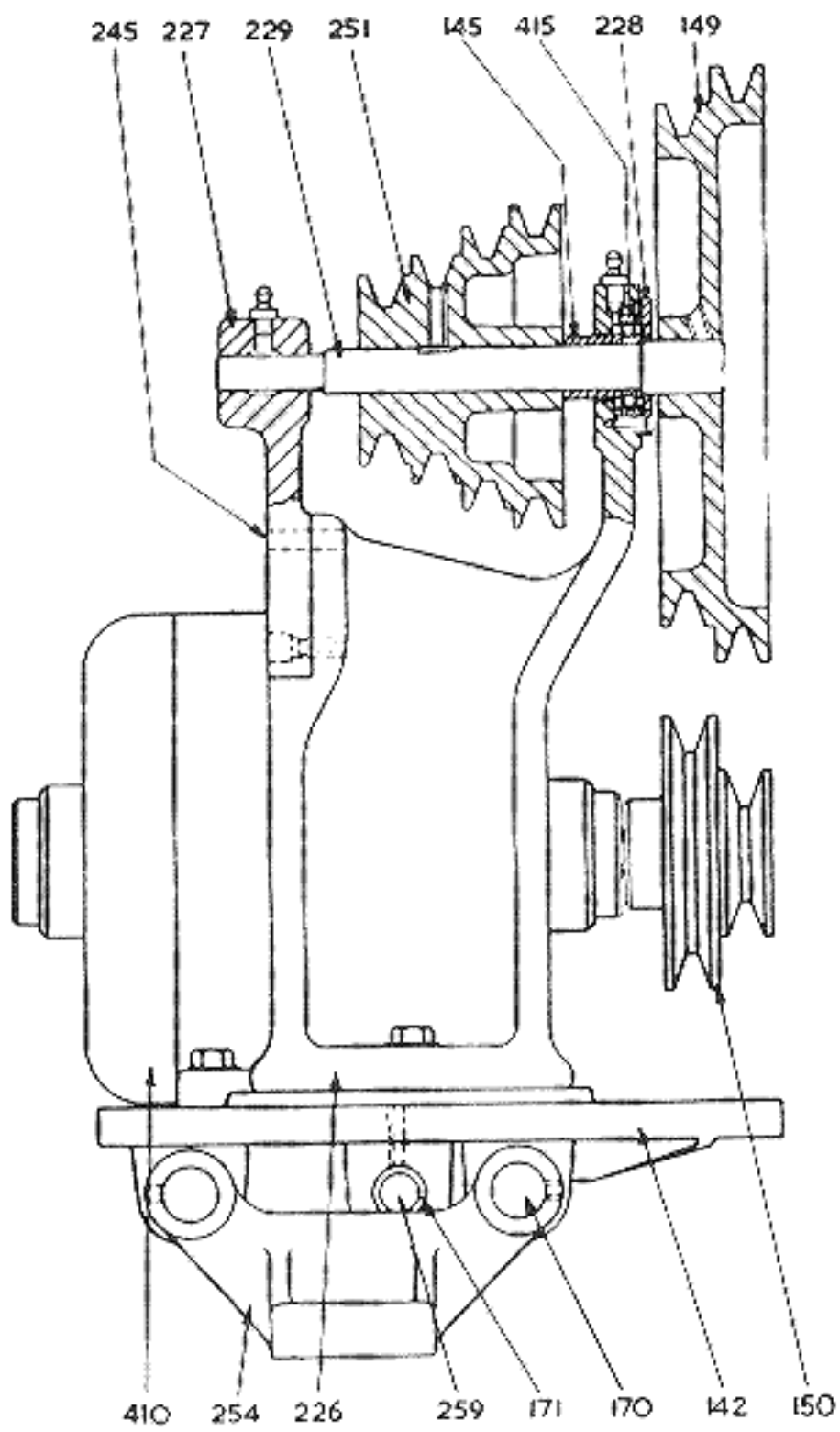

Diagram FA. Old Type Countershaft

NOTE

When ordering spares or replacement parts, please quote the serial number and model (to be found between front vee and flat at tailstock end of bed), the bed length and in the case of electrical equipment, the mains supply voltage, frequency, rating (amps) and whether single or three phase. It would assist if the line drawing diagram reference is given, and also the bore size of any pulleys required.

METHOD OF CHECKING PRE-LOADING OF SPINDLE

1. Move belt on pulley in headstock so that it does not interfere with the rotation of the spindle.

2. Fasten catch plate to spindle of machine.

3. Make a loop approx 1″ dia. at both ends of a length of string approx. 4ft. long.

4. Attach one loop to cut out of catch plate and wind string round periphery.

5. Hook spring balance on loop at free end.

6. With the spring balance held horizontally walk backwards holding the balance and note the reading in pounds whilst the spindle is rotating.

7. Multiply this balance reading by the radius of the catch plate (usually $2\frac{9}{16}$″) and this will then give loading of spindle in "pounds inches".

8. The pre-loading of the spindle varies with the speed and nature of work. For speeds up to 1400 r.p.m., between 1 and 2 lb. in. is usually satisfactory. For speeds 1400 to 2000 r.p.m. or over, between 1 and $1\frac{1}{2}$ lb. in. Do not exceed 2 lb. in. (i.e. approx. 1 lb. balance reading).

   N.B. Overgreasing of spindle bearings will increase loading and should be avoided.

9. Any adjustment can be done by tightening or slackening the locknut at the end of the spindle. When slackening, it may be necessary to gently tap the locknut end of the spindle with a hide or rubber mallet to release the pre-load after slackening the locknut.

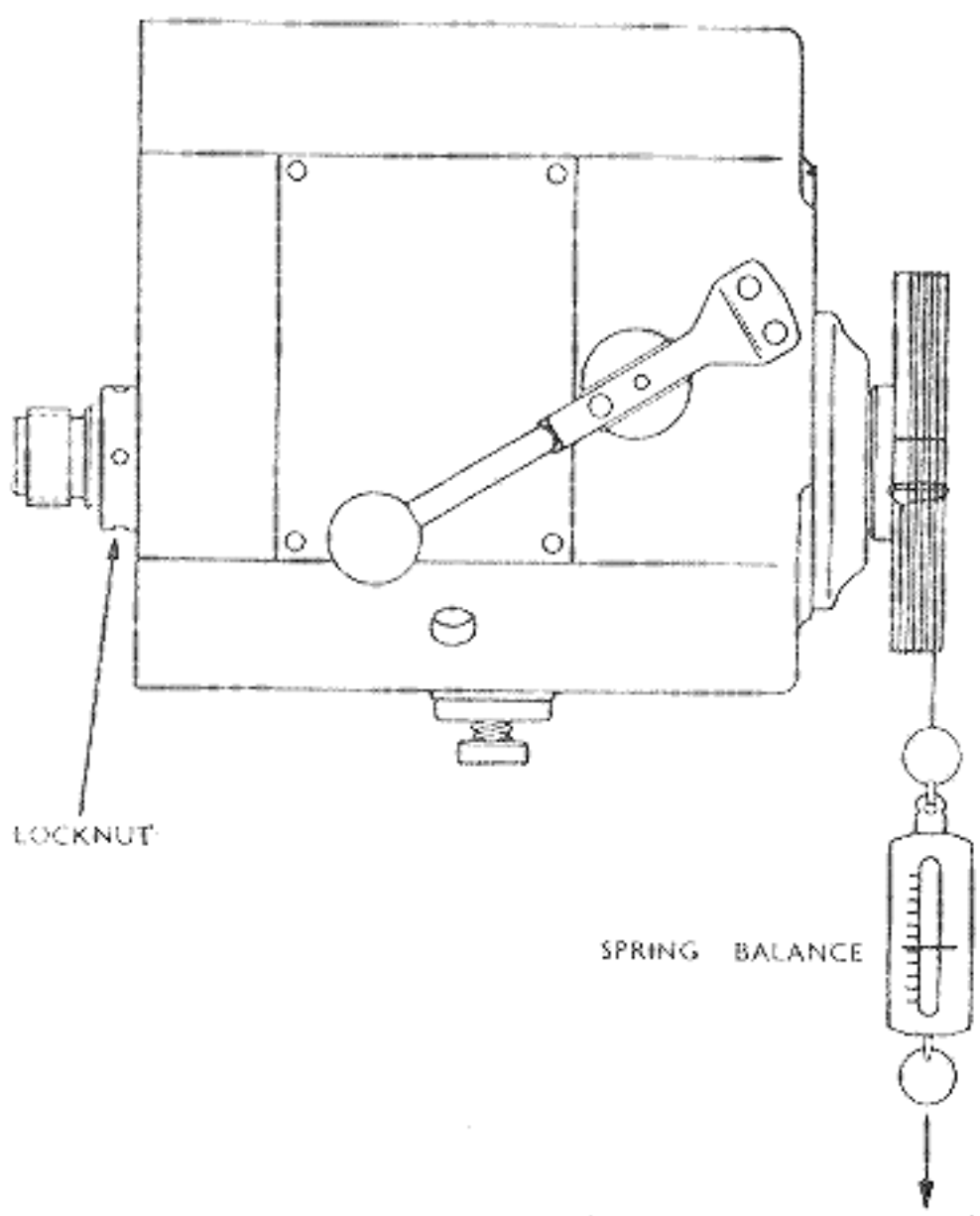

INSTRUCTIONS FOR DISMANTLING HEADSTOCK AND FITTING NEW BEARINGS

(see line drawings on page 11)

MARK II HEADSTOCK

1. Disconnect mains supply to machine.
2. Remove the rear sheet steel guard and top plate from the headstock.
3. Slacken off the screw securing back gear shaft (655), slide out shaft and remove the complete back gear sleeve (656 and 657).
4. Remove the screw and spring securing plunger (673) in lever body.
5. Slacken the screw securing pivot pin (672) in gear lever (654), remove pin and then the gear lever. If fitted, release switch locking screw (683) before removing lever.
6. Remove screwed pin (678) from gear shifter spindle (669) and lift out gear shifter boss (670).
7. Take out gear shifter bar (668) and shoes (667) etc.
8. Slacken the screws holding spindle locknut (666) in position and unscrew locknut.
9. Remove the front and rear covers (102 and 103), also spacing washer (166) from rear of spindle.
10. Using a soft hammer, gently tap spindle at rear until it is driven out through front of headstock so that cone of rear bearing can be removed.
11. Lift spindle sliding gear (663) out of spindle keyway and draw spindle out through front of headstock. It is advisable to have keyway at bottom to avoid burrs being thrown up on spindle. Make sure the sliding gear is free from drive pins (660) when withdrawing spindle.
12. Remove cone of front bearing from spindle.
13. Using a hardened pin (or pins) in the knock-out holes inside the headstock remove the bearing cups (outer races) from front and rear housings.
14. Place new bearing cups in their housings and gently press or tap home (see note i.).
15. Gently drive cone (inner race) of new front bearing on spindle.
16. Place spindle in headstock and replace the sliding gear (663) pulley (659) and spacing washer (664).
17. Gently drive cone (inner race) of new rear bearing on spindle and secure with spacing collar (166) and locknut (666) (see note i.).
18. Lightly smear bearings with grease before replacing front and rear covers (102 and 103).
19. Slacken locknut (666) and finger tighten to remove end play.
20. Rotate spindle by hand to expel all excess grease from rollers.
21. Tighten the locknut a fraction more to give slight pre-load to the spindle assembly and lock in position. Refer to method of checking pre-load.
22. To complete assembly, reverse dismantling procedure 1 to 7.

MARK I AND BENCH HEADSTOCK

1. Disconnect mains supply to machine.
2. Remove the sheet steel guard from headstock.
3. Slacken the grub screw which locates back gear shaft (164) with ball spring, also the grub screw in back gear handle (94) and push back gear shaft out through front of headstock. This will allow back gears (104) and (105) to be removed.

4. Remove gear shifter [illegible], by slackening grub screw. Withdraw eccentric (108) and headed bush (153) by removing countersunk screws from bush and pulling eccentric outwards.
5. Remove front and rear covers (102 and 103).
6. Slacken off and remove locknuts (119) and spacing washer (166) from rear of spindle.
7. Using a soft hammer, gently tap spindle at rear until it is driven out through front of headstock so that cone of rear bearing can be removed.
8. Lift spindle sliding gear (107) out of spindle keyway and draw spindle out through front of headstock. It is advisable to have keyway at bottom to avoid burrs being thrown up on spindle. Make sure that sliding gear is free from drive pins (196) when withdrawing spindle.
9. Remove cone of front bearing from spindle.
10. Using a hardened pin (or pins) in the knock-out holes inside the headstock, remove the bearing cups (outer races) from front and rear bearings.
11. Place new bearing cups in their housings and gently press or tap home (see note i.).
12. Gently drive cone (inner race) of new front bearing on spindle.
13. Place spindle in headstock and replace the sliding gear (107) pulley (250 on bench models, 602 on Mark I) and spacing washer (117).
14. Gently drive cone (inner race) of new rear bearing on spindle and secure with spacing collar (166) and locknut (119) (see note i.).
15. Lightly smear bearings with grease before replacing front and rear covers (102 and 103).
16. Slacken locknut (119) and finger tighten to remove end play.
17. Rotate spindle by hand to expel all excess grease from rollers.
18. Tighten the locknut a fraction more to give slight pre-load to the spindle assembly and lock in position with other locknut. Refer to method of checking pre-load.
19. To complete assembly, reverse dismantling procedure 1 to 4.

NOTES

(i) It is essential that bearings and all parts are kept clean and free from dirt. Precision 3 bearings are identified by a copper dot which indicates the high point of any bearing run-out. The dots on the two bearing cups and cones should be aligned with each other to give the best results.

(ii) When removing and fitting new bearings it will be found easier if the headstock is completely removed from the lathe bed. The two clamps beneath the headstock must first be released with a box wrench and any electrical wiring disconnected. The headstock can then be removed from the end of the lathe bed.

INSTRUCTIONS FOR REMOVAL OF CARRIAGE ASSEMBLY

1. Unclamp tailstock and slide off end of bed.
2. Wind carriage unit down to tailstock end of bed.
3. Remove gib strip from rear of saddle.
4. Remove the two securing screws fastening the leadscrew bracket (tailstock end) to the bed and slide bracket off end of leadscrew.
5. Supporting leadscrew by hand, slide carraige unit off end of bed.
6. Replace leadscrew bracket to support leadscrew.

If it is desired to remove the apron assembly only, proceed as 1 above, then remove the carriage locking screw from the saddle and the two screws securing the apron to the saddle and then as 4, 5 and 6 above.